Model Number for KU080

KU080	-10	P	-1100	A	F0	S1	M
Model	Lead	Precision Grade	Effective Stroke	Slider Type	Motor Flange	Limit Switch	Motor
	5 mm 10 mm 20 mm	C: Normal P: Precision		A: Standard	F0: 200W F: Without Flange	S1: OMRON SX671 S2: OMRON SX674 S3: SUNX GX-F12A S4: SUNX GX-F12A-P None: No Limit Switch	M: Supplied With Motor None: Without Motor

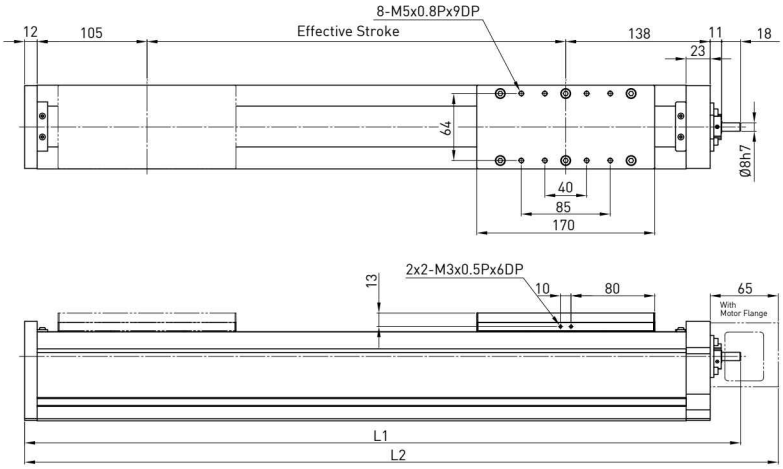

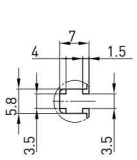

Detail A

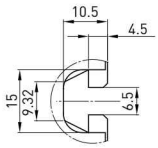

Detail B

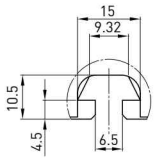

Detail C

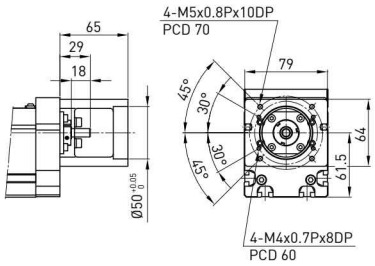

Motor Adaptor Flange F0

Effective Stroke (mm)	L1	L2	Weight (kg)
100	384	420	7.04
150	434	470	7.48
200	484	520	7.92
250	534	570	8.36
300	584	620	8.8
350	634	670	9.24
400	684	720	9.68
450	734	770	10.12
500	784	820	10.56
550	834	870	11.0
600	884	920	11.44
650	934	970	11.88
700	984	1020	12.32
750	1034	1070	12.76
800	1084	1120	13.2
850	1134	1170	13.64
900	1184	1220	14.08
950	1234	1270	14.52
1000	1284	1320	14.96
1050	1334	1370	15.4
1100	1384	1420	15.84

AC motor output			W	200		
Drive				Ballscrew C7(normal)		
Lead			mm	5	10	20
Rated RPM			RPM	3000	3000	3000
Max linear speed*			mm/sec	250	500	1000
Rated thrust			N	560	280	140
Repeatability			mm	±0.02		
Effective stroke			mm	100~1100		
Max load (H)			kg	60	40	20
Rated dynamic load**	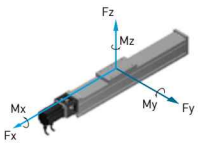	Fyd	N	50	50	50
		Fzd	N	600	400	200
		Mxd	N-m	11	12.5	14
		Myd	N-m	9	10	11
		Mzd	N-m	9	10	11
Permitted load condition***	$\frac{Fy}{Fyd}+\frac{Fz}{Fzd}+\frac{Mx}{Mxd}+\frac{My}{Myd}+\frac{Mz}{Mzd}\leq 1$ Fy、Fz、Mx、My、Mz are working loads					

* Vibration might occur when the effective stroke is longer than 550mm.
The maximum speed should be decreased by 15% for every 100mm of increased stroke.
**The load condition is based on 10,000km operation.
***If used in a special condition, please contact HIWIN.

Single Axis Robot

KE Series

6.1 Features

- Compact and lightweight
- Easy system installation and maintenance
- MG guideway is made of stainless steel for anti-corrosion
- Closed design
- High accuracy, high efficiency, high reliability

6.2 Applications

- Precision Industry & Semiconductor
- Inspection, Testing & Assembly equipment
- Optical & Medical equipment

6.3 KE Series

Model Number for KE030

KE030	-1	C	-300	A	F0	S1	M
Model	Lead	Precision Grade	Effective Stroke	Slider Type	Motor Flange	Limit Switch	Motor
	1 mm	C: Normal P: Precision		A: Standard	F0 : Direct	S1:OMRON SX671 S2:OMRON SX674 S3:SUNX GX-F12A S4:SUNX GX-F12A-P None: No Limit Switch	M: Supplied With Motor None: Without Motor

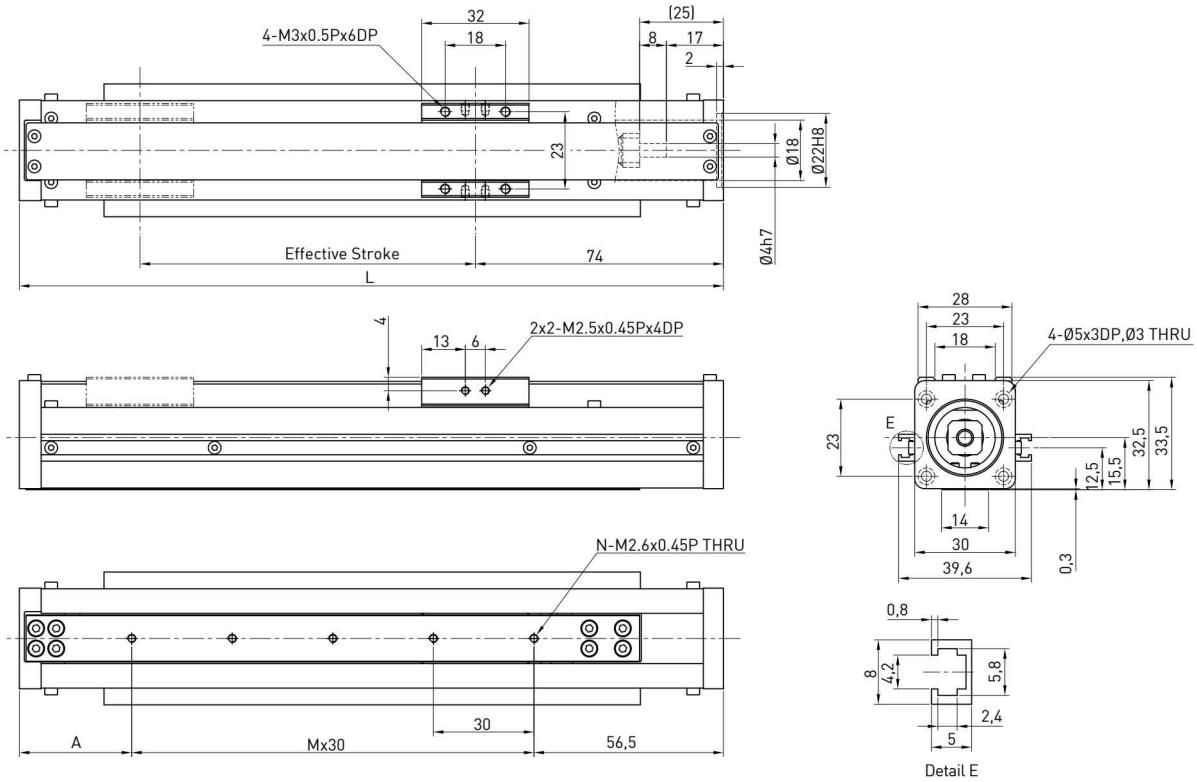

Effective stroke (mm)	L	A	M	N	Weight (kg)
50	160	43.5	2	3	0.2
100	210	33.5	4	5	0.5
150	260	23.5	6	7	0.8
200	310	43.5	7	8	1.1
250	360	33.5	9	10	1.4
300	410	53.5	10	11	1.9

AC motor output			W	28 stepping motor
Rated RPM			RPM	-
Lead			mm	1.25
Max linear speed			mm/sec	62.5
Rated thrust			N	175
Repeatability			mm	±0.02
Effective stroke			mm	50-300
Max load (H)			kg	3
Rated dynamic load*	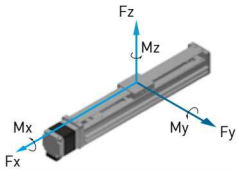	Fyd	N	4
		Fzd	N	30
		Mxd	N-m	0.2
		Myd	N-m	0.1
		Mzd	N-m	0.1
Permitted load condition**	$\frac{Fy}{Fyd}+\frac{Fz}{Fzd}+\frac{Mx}{Mxd}+\frac{My}{Myd}+\frac{Mz}{Mzd}\leq 1$ Fy, Fz, Mx, My, Mz Mz are working loads			

* The load condition is based on 10,000km operation.
** If used on the vertical axis or in a special condition, please contact HIWIN.

Model Number for KE040

KE040	-10	C	-300	A	F0	S1	M
Model	Lead	Precision Grade	Effective Stroke	Slider Type	Motor Flange	Limit Switch	Motor
	2 mm 5 mm	C: Normal P: Precision		A: Standard	F0 : Direct	S1:OMRON SX671 S2:OMRON SX674 S3:SUNX GX-F12A S4:SUNX GX-F12A-P None: No Limit Switch	M: Supplied With Motor None: Without Motor

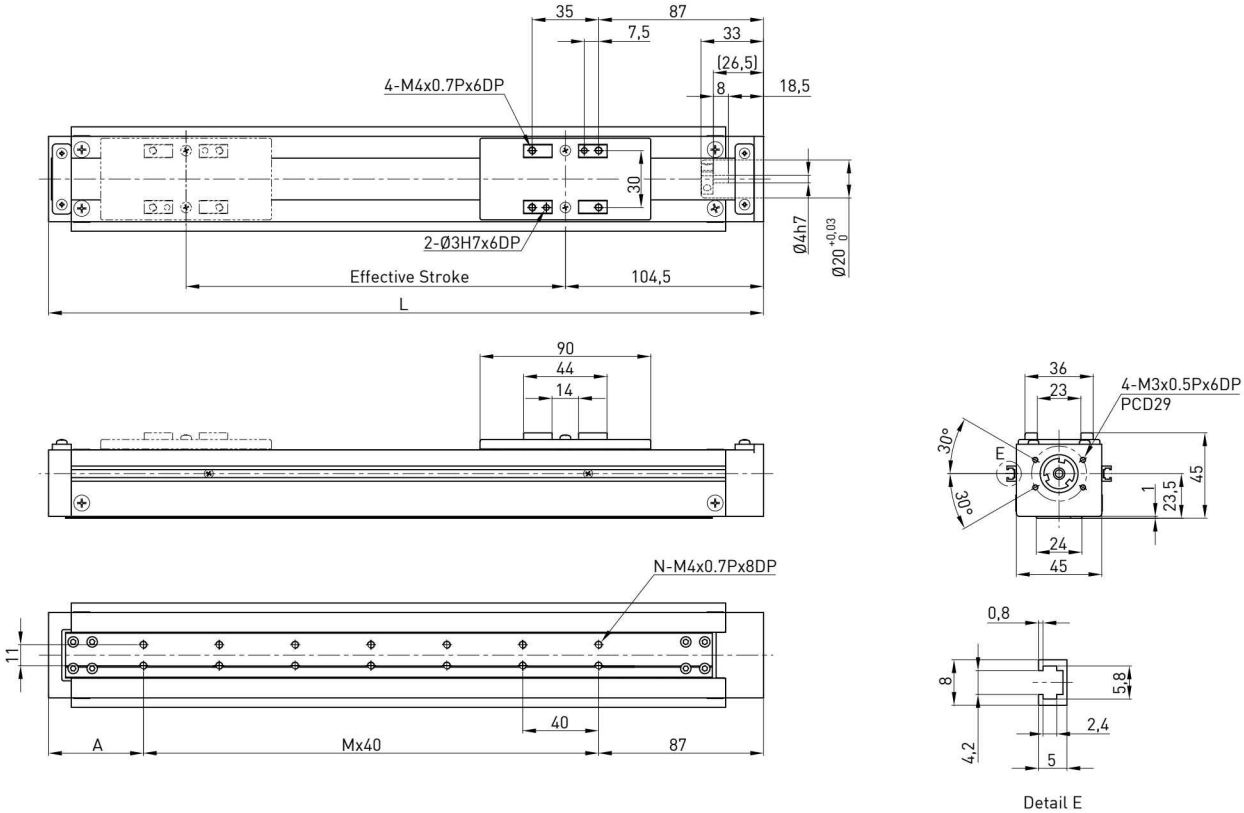

Effective stroke (mm)	L	A	M	N	Weight (kg)
50	227	60	2	6	1
100	277	70	3	8	1.3
150	327	40	5	12	1.6
200	377	50	6	14	1.9
250	427	60	7	16	2.2
300	477	70	8	18	2.5

AC motor output		W	50	
Rated RPM		RPM	3000	3000
Lead		mm	2	5
Max linear speed		mm/sec	100	250
Rated thrust		N	280	140
Repeatability		mm	±0.02	
Effective stroke		mm	50~300	
Max load (H)		kg	6	4
Rated dynamic load*	Fyd	N	10	10
	Fzd	N	60	30
	Mxd	N-m	1	1
	Myd	N-m	0.55	0.6
	Mzd	N-m	0.55	0.5
Permitted load condition**	$\frac{Fy}{Fyd}+\frac{Fz}{Fzd}+\frac{Mx}{Mxd}+\frac{My}{Myd}+\frac{Mz}{Mzd}\leq 1$ Fy, Fz, Mx, My, Mz Mz are working loads			

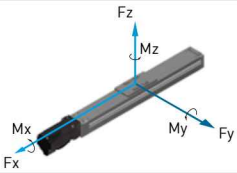

* The load condition is based on 10,000km operation.
** If used on the vertical axis or in a special condition, please contact HIWIN.

Model Number for KE050 (Single Slider)

KE050	-04	C	-400	A	F0	S2	M
Model	Lead	Precision Grade	Effective Stroke	Slider Type	Motor Flange	Limit Switch	Motor
	4 mm	C: Normal		A: Standard	F0:Direct	S2: OMRON SX674 None: No Limit Switch	M: Supplied With Motor None: Without Motor

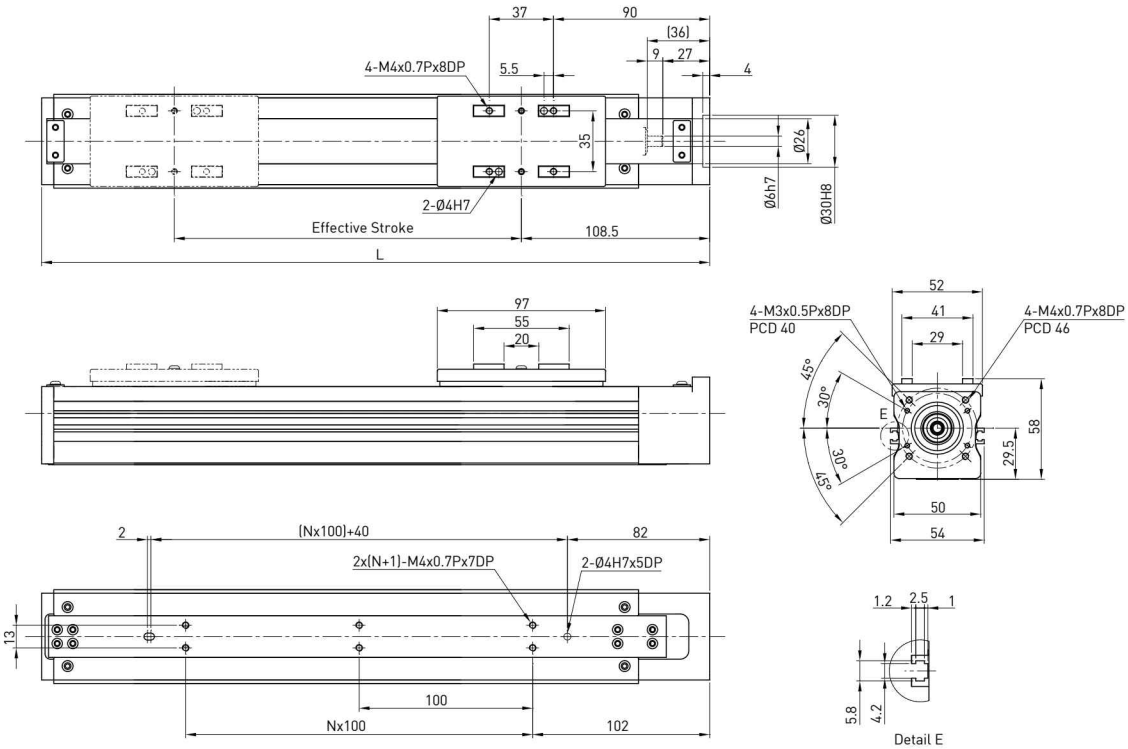

Effective stroke (mm)	L	N	Weight (kg)
100	285	1	1.4
200	385	2	1.7
300	485	3	2
400	585	4	2.3

AC motor output		W	50
Rated RPM		RPM	3000
Lead		mm	4
Max linear speed		mm/sec	200
Rated thrust		N	175
Repeatability		mm	±0.02
Effective stroke		mm	100~400
Max load (H)		kg	8
Rated dynamic load*	Fyd	N	10
	Fzd	N	80
	Mxd	N-m	1.5
	Myd	N-m	0.8
	Mzd	N-m	0.8
Permitted load condition**	$\frac{Fy}{Fyd}+\frac{Fz}{Fzd}+\frac{Mx}{Mxd}+\frac{My}{Myd}+\frac{Mz}{Mzd}\leq 1$ Fy, Fz, Mx, My, Mz are working loads		

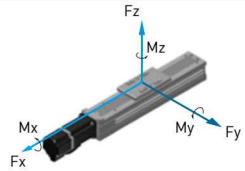

* The load condition is based on 10,000km operation.
** If used on the vertical axis or in a special condition, please contact HIWIN.

Model Number for KE050 (Double Slider)

KE050	D	-04	C	-250	A	F0	S2	M
Model	Double Slider	Lead	Precision Grade	Effective Stroke	Slider Type	Motor Flange	Limit Switch	Motor
		4mm	C: Normal		A: Standard	F0 :Direct	S2: OMRON SX674 None: No Limit Switch	M: Supplied With Motor None: Without Motor

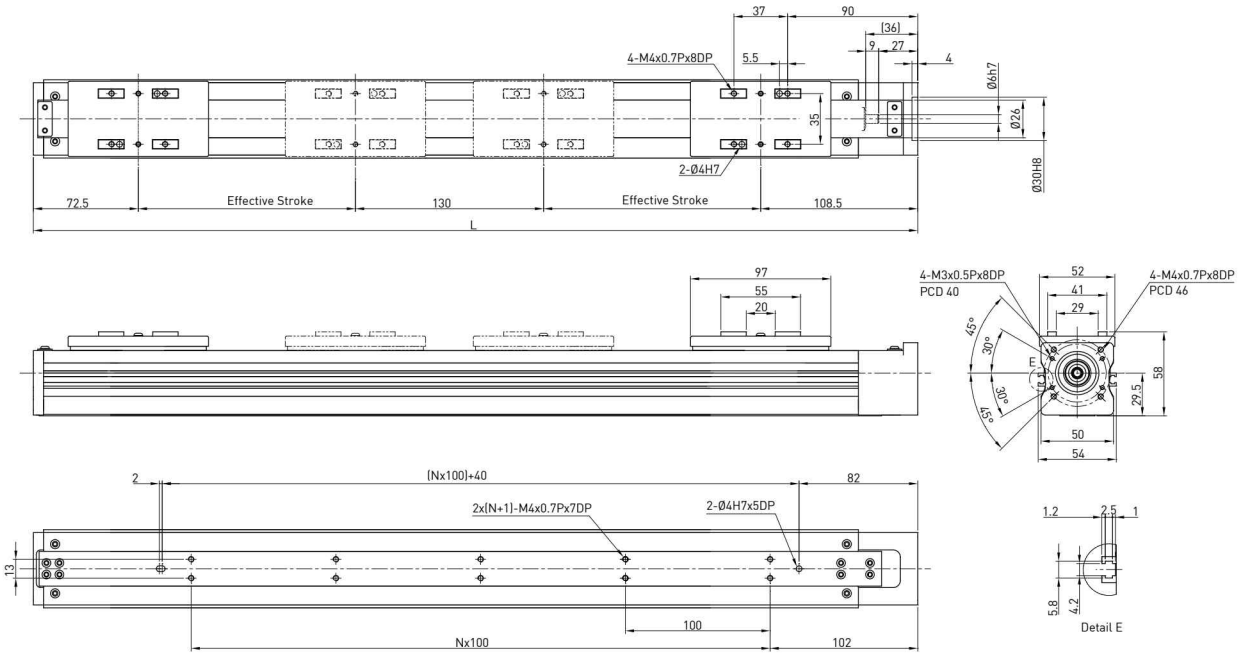

Effective stroke (mm)	L	N	Weight (kg)
100	511	3	2.3
150	611	4	2.5
200	711	5	2.8
250	811	6	3.0

AC motor output		W	50
Rated RPM		RPM	3000
Lead		mm	4
Max linear speed		mm/sec	200
Rated thrust		N	175
Repeatability		mm	±0.02
Effective stroke		mm	100~400
Max load (H)		kg	8
Rated dynamic load*	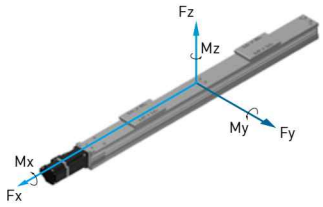	Fyd	N	10
		Fzd	N	80
		Mxd	N-m	1.5
		Myd	N-m	0.8
		Mzd	N-m	0.8
Permitted load condition**	$\frac{Fy}{Fyd}+\frac{Fz}{Fzd}+\frac{Mx}{Mxd}+\frac{My}{Myd}+\frac{Mz}{Mzd}\leq 1$ Fy, Fz, Mx, My, Mz are working loads		

* The load condition is based on 10,000km operation.
** If used on the vertical axis or in a special condition, please contact HIWIN.

Model Number for KE065

KE065	-10	C	-600	A	F0	S1	M
Model	Lead	Accuracy Grade	Effective Stroke	Slider Type	Flange F0	Limit Switch	Motor
	5 mm 10 mm	C: Normal P: Precision		A: Standard	F0: 100W	S1: OMRON SX671 S2: OMRON SX674 S3: SUNX GX-F12A S4: SUNX GX-F12A-P None: No Limit Switch	M: Supplied With Motor None: Without Motor

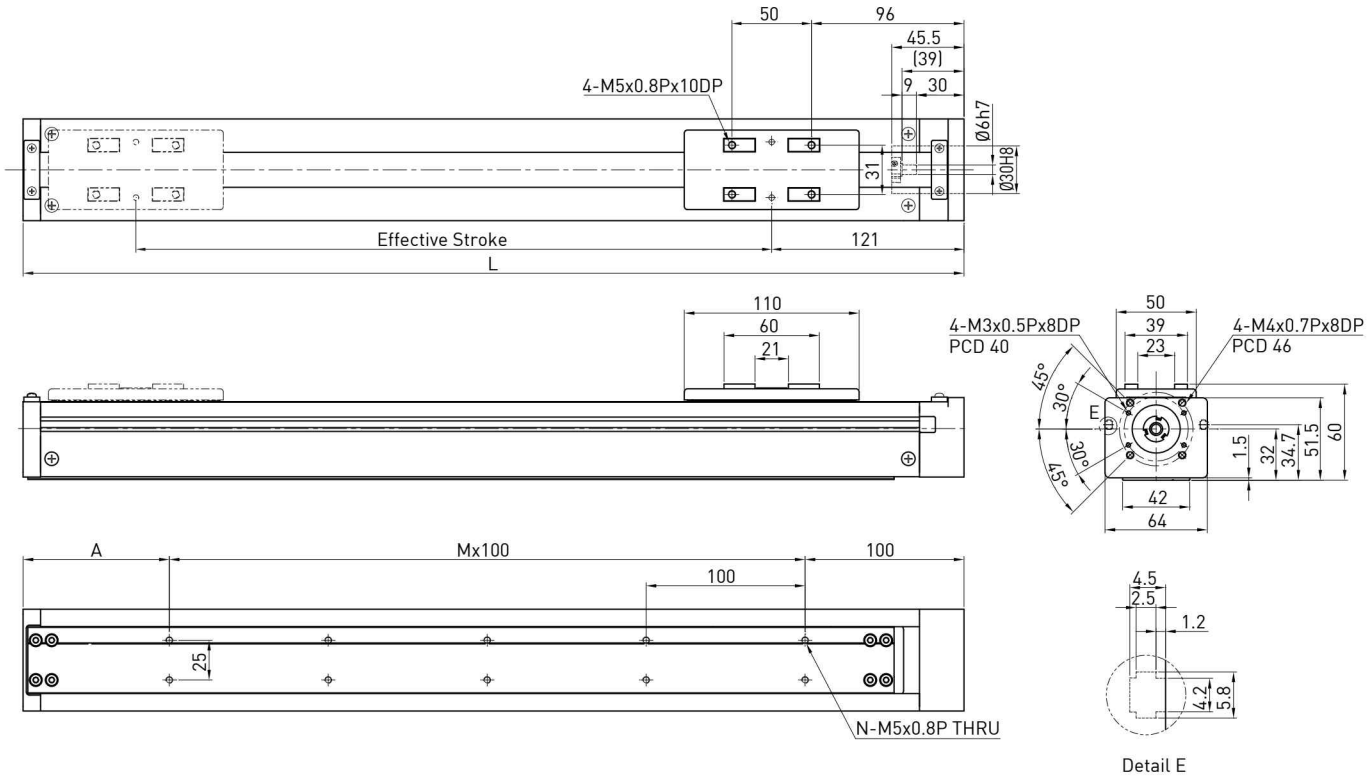

Effective stroke (mm)	L	A	M	N	Weight (kg)
50	242	42	1	4	2.5
100	292	92	1	4	2.8
150	342	42	2	6	3.1
200	392	92	2	6	3.4
250	442	42	3	8	3.7
300	492	92	3	8	4
350	542	42	4	10	4.3
400	592	92	4	10	4.6
450	642	42	5	12	4.9
500	692	92	5	12	5.2
550	742	42	6	14	5.5
600	792	92	6	14	5.8

AC motor output		W	100	
Rated RPM		RPM	3000	3000
Lead		mm	5	10
Max linear speed*		mm/sec	250	500
Rated thrust		N	280	140
Repeatability		mm	±0.02	
Effective stroke		mm	50~600	
Max load (H)		kg	15	8
Rated dynamic load**	Fyd	N	10	10
	Fzd	N	150	80
	Mxd	N-m	4.4	4.7
	Myd	N-m	2.3	2.6
	Mzd	N-m	2.3	2.6
Permitted load condition***	$\frac{Fy}{Fyd}+\frac{Fz}{Fzd}+\frac{Mx}{Mxd}+\frac{My}{Myd}+\frac{Mz}{Mzd}\leq 1$ Fy, Fz, Mx, My, Mz Mz are working loads			

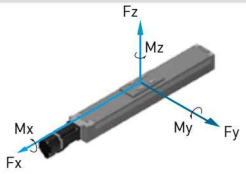

* Vibration might occur when the effective stroke is longer than 550mm.
The maximum speed should be decreased by 15% for every 100mm of increased stroke.
**The load condition is based on 10,000km operation.
***If used on vertical axis or special condition , please contact HIWIN.

Model Number for KE070

KE070	-10	C	-600	A	F0	S1	M
Model	Lead	Accuracy Grade	Effective Stroke	Slider Type	Flange F0	Limit Switch	Motor
	5 mm 10 mm	C: Normal P: Precision		A: Standard	F0: Direct	S1: OMRON SX671 S2: OMRON SX674 S3: SUNX GX-F12A S4: SUNX GX-F12A-P None: No Limit Switch	M: Supplied With Motor None: Without Motor

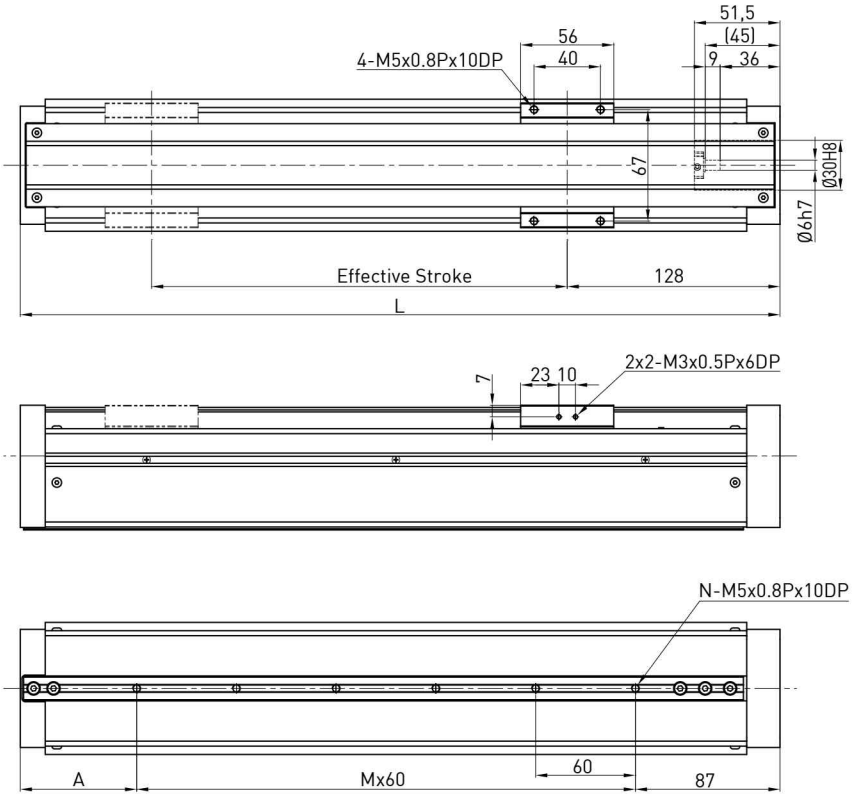

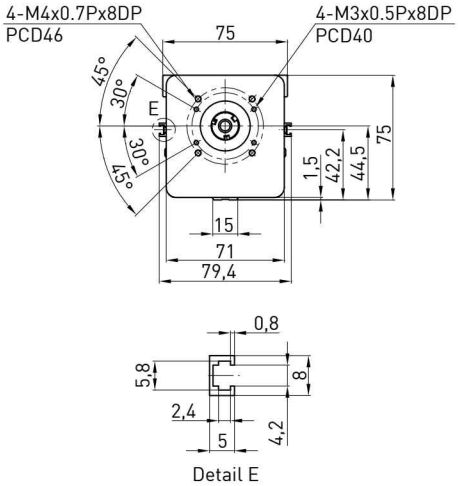

Effective stroke (mm)	L	A	M	N	Weight (kg)
50	257	50	2	3	2.8
100	307	40	3	4	3.1
150	357	90	3	4	3.4
200	407	80	4	5	3.7
250	457	70	5	6	4
300	507	60	6	7	4.3
350	557	50	7	8	4.6
400	607	40	8	9	4.9
450	657	90	8	9	5.2
500	707	80	9	10	5.5
550	757	70	10	11	5.8
600	807	60	11	12	6.1

AC motor output		W	100	
Rated RPM		RPM	3000	3000
Lead		mm	5	10
Max linear speed*		mm/sec	250	500
Rated thrust		N	280	140
Repeatability		mm	±0.02	
Effective stroke		mm	50~600	
Max load (H)		kg	20	15
Rated dynamic load**	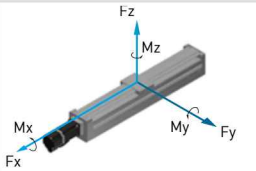	Fyd	N	10	10
		Fzd	N	200	150
		Mxd	N-m	3.5	3.5
		Myd	N-m	2	2.1
		Mzd	N-m	2	2.1
Permitted load condition***	$\frac{Fy}{Fyd}+\frac{Fz}{Fzd}+\frac{Mx}{Mxd}+\frac{My}{Myd}+\frac{Mz}{Mzd}\leq 1$ Fy, Fz, Mx, My, Mz Mz are working loads			

* Vibration might occur when the effective stroke is longer than 550mm.
The maximum speed should be decreased by 15% for every 100mm of increased stroke.
**The load condition is based on 10,000km operation.
***If used on vertical axis or special condition , please contact HIWIN.

Model Number for KE090

KE090	-10	C	-600	A	F0	S1	M
Model	Lead	Accuracy Grade	Effective Stroke	Slider Type	Flange F0	Limit Switch	Motor
	5 mm 10 mm	C: Normal P: Precision		A: Standard	F0: Direct	S1: OMRON SX671 S2: OMRON SX674 S3: SUNX GX-F12A S4: SUNX GX-F12A-P None: No Limit Switch	M: Supplied With Motor None: Without Motor

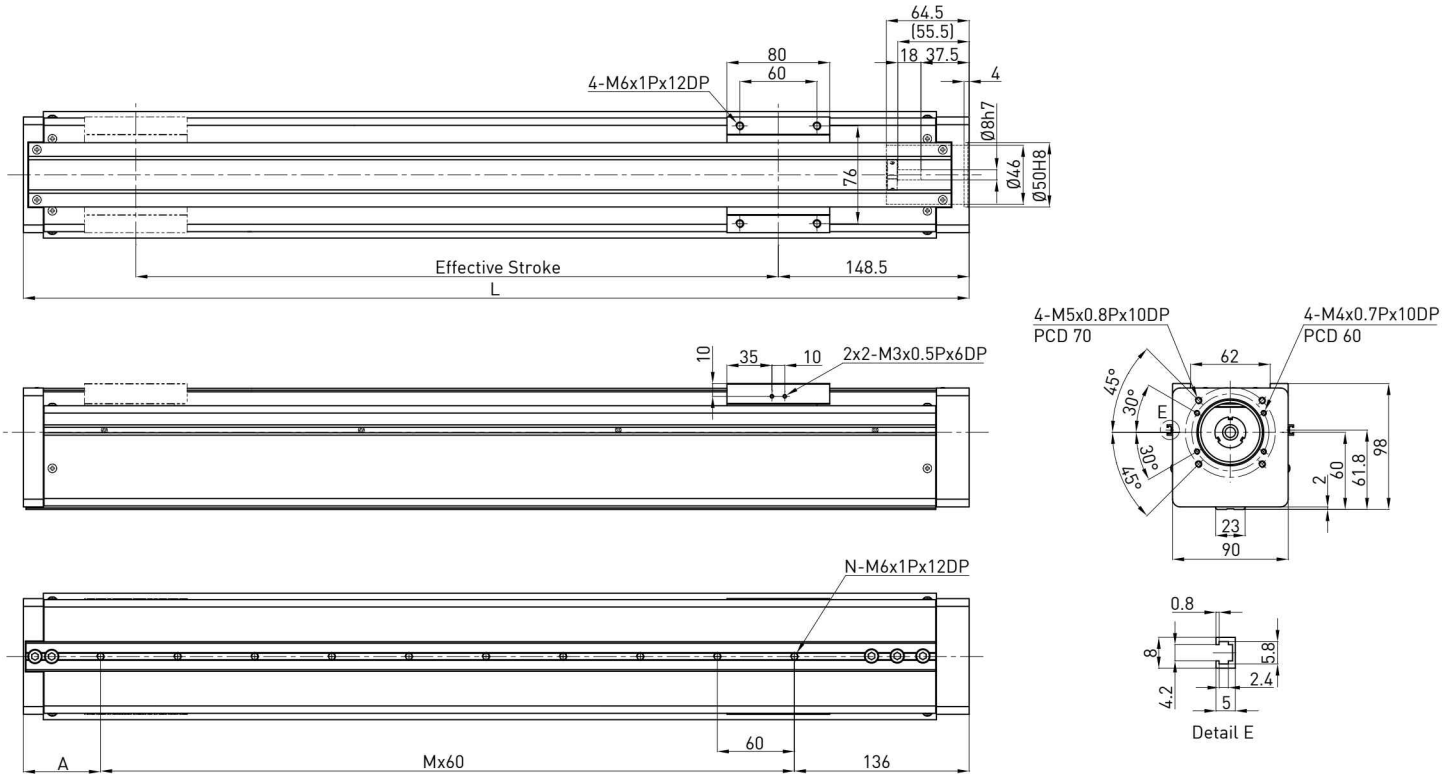

Effective stroke (mm)	L	A	M	N	Weight (kg)
50	286	90	1	2	6.7
100	336	80	2	3	7
150	386	70	3	4	7.3
200	436	60	4	5	7.6
250	486	50	5	6	7.9
300	536	40	6	7	8.2
350	586	90	6	7	8.5
400	636	80	7	8	8.8
450	686	70	8	9	9.1
500	736	60	9	10	9.4
550	786	50	10	11	9.7
600	836	40	11	12	10

AC motor output		W	200	
Rated RPM		RPM	3000	3000
Lead		mm	5	10
Max linear speed		mm/sec	250	500
Rated thrust		N	560	280
Repeatability		mm	±0.02	
Effective stroke		mm	50~600	
Max load (H)		kg	25	23
Rated dynamic load*	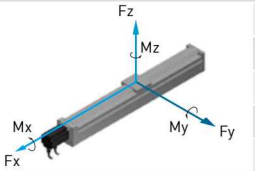	Fyd	N	10	10
		Fzd	N	250	230
		Mxd	N-m	13	12
		Myd	N-m	7.1	7.3
		Mzd	N-m	7.1	7.3
Permitted load condition**	$\frac{Fy}{Fyd}+\frac{Fz}{Fzd}+\frac{Mx}{Mxd}+\frac{My}{Myd}+\frac{Mz}{Mzd}\leq 1$ Fy, Fz, Mx, My, Mz Mz are working loads			

*The load condition is based on 10,000km operation.
**If used on vertical axis or special condition , please contact HIWIN.