Single Axis Robot
KK Series

The HIWIN KK Single Axis Robot is driven by a ballscrew while a guideway slides on an optimized U-rail to achieve higher accuracy and greater stiffness.

1.1 Features

- An integrated system
- Easy installation and maintenance
- Compact and lightweight
- High accuracy
- High stiffness
- Complete line of accessories

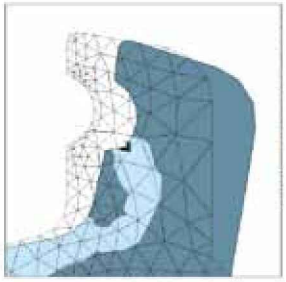

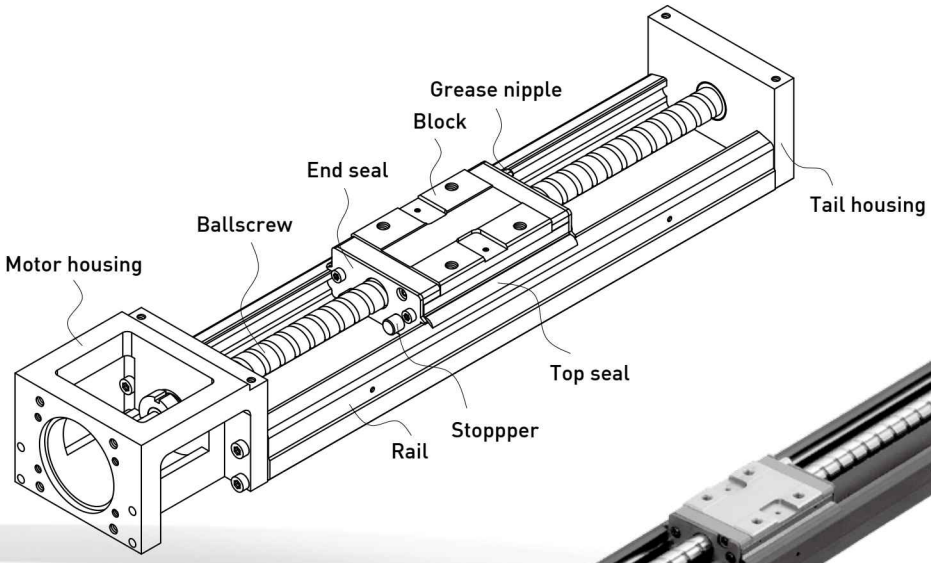

1.1.1 Modulization

The KK Single Axis Robot integrating a ballscrew and guideway forms a modularized product. The modularized design can help customers save time, cost and system inspection. Therefore, installation efficiency and a space-saving design are also promoted.

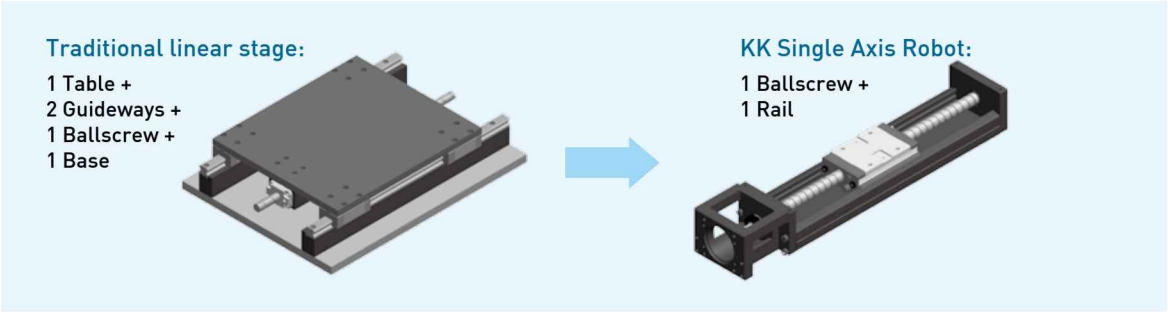

1.1.2 Equivalent Load

The gothic arch contact design sustains load from all directions and offers high rigidity and accuracy.

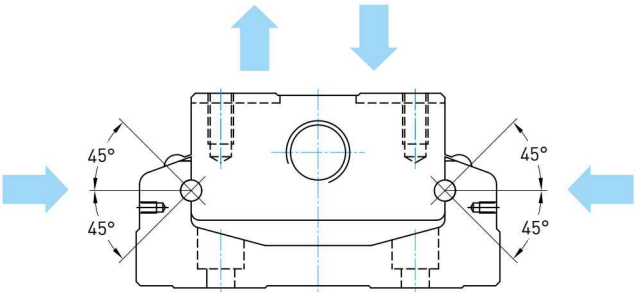

1.1.3 High Stiffness

Using finite element analysis on the U-shaped cross section allows the volume and rigidity to be made balanced, therefore, a high rigidity rail, compact design and a light weight design are also accomplished simultaneously.

Moment of inertia — Unit:mm^4

Model no.	I_X	I_Y
KK30	7.554×10^2	12.726×10^3
KK40	3.533×10^3	5.317×10^4
KK50	9.6×10^3	1.34×10^5
KK60	2.056×10^4	2.802×10^5
KK80	6.711×10^4	8.444×10^5
KK86	7.445×10^4	1.134×10^6
KK100	1.296×10^5	2.035×10^6
KK130	2.546×10^5	5.073×10^6

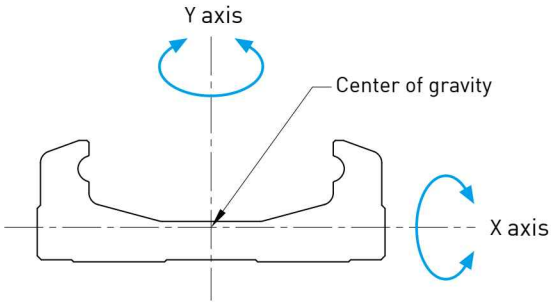

I_X : Moment of inertia computed about X axis

I_Y : Moment of inertia computed about Y axis

1.1.4 Various Specification

KK Single Axis Robots of various specifications are developed, providing customers with different choices relating to space and loading conditions.

Model no.	W	H
KK30	30	15
KK40	40	20
KK50	50	26
KK60	60	33
KK80	80	45
KK86	86	46
KK100	100	55
KK130	130	65

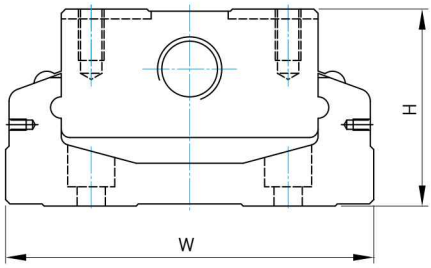

1.2 Accessories

Accessories of KK Single Axis Robot are also supported for specific demands, such as an aluminum cover, bellows, motor adaptor flange and limit switchs.

- Aluminum cover and bellow: contamination protection
- Motor adaptor flange: connection for different types of motors
- Limit switchs: starting point, positioning and other safety matters

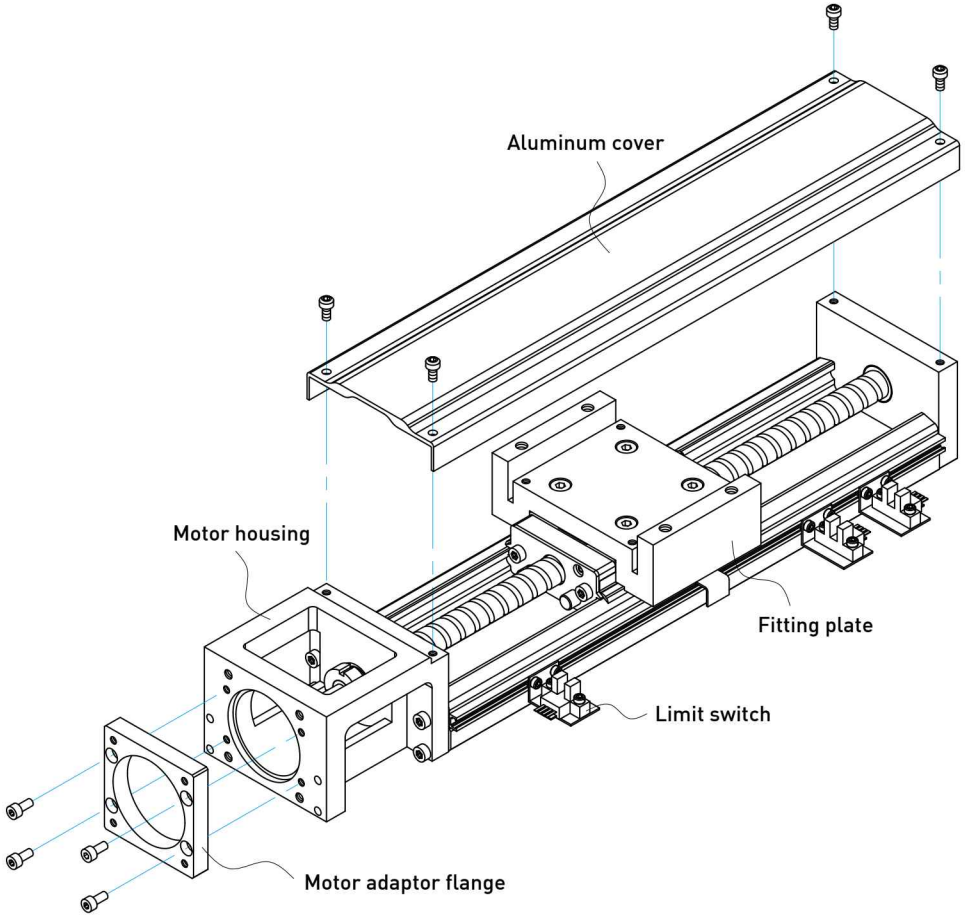

•Cover

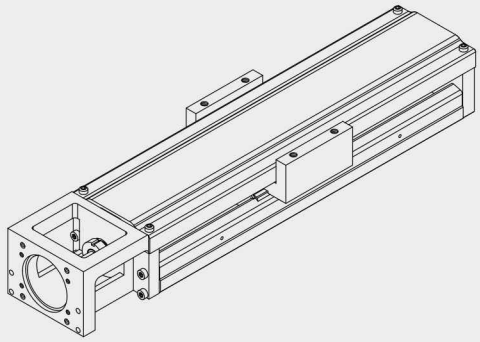

•Bellows

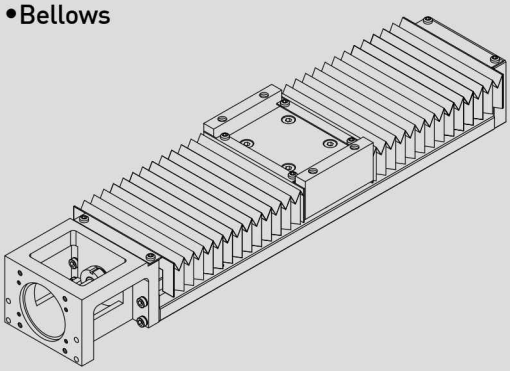

1.3 Model Number of KK Series

KK 60 10 P E - 400 E A 2 E - F0 C S0 M

KK Stage

Nominal Width:
30, 40, 50, 60, 80,
86, 100, 130

Ballscrew Lead:
KK 30 : 1
KK 40 : 1
KK 50 : 2
KK 60 : 5, 10
KK 80 : 10, 20
KK 86 : 10, 20
KK 100 : 20
KK 130 : 25

Accuracy Grade:
P: Precision, C: Normal

E: Ballscrew Special Order
None: Normal Type

Rail Length (unit : mm)
KK30 : 75, 100, 125, 150, 175, 200
KK40 : 100, 150, 200
KK50 : 150, 200, 250, 300
KK60 : 150, 200, 300, 400, 500, 600
KK80 : 340, 440, 540, 640, 740, 940
KK86 : 340, 440, 540, 640, 740, 940
KK100 : 980, 1080, 1180, 1280, 1380
KK130 : 980, 1180, 1380, 1680

E: Rail Special Order
None: Normal Type

M:Supply With Motor
None:Without Motor

Limit Switch:
S0: Switch Rail Only
S1: Omron SX671
S2: Omron SX674
S3: SUNX GX-F12A
S4: SUNX GX-F12A-P
S5: YAMATAKE APM-D3B1-03
(suitable for KK30)
SE: Sensor Special Order
None: No Limit Switch and
Switch Rail

C: Aluminum Cover
B: Bellows
None: Normal Type

Motor Adaptor Flange
ref. catalog (P.30~P.36)

E: Block Special Order
None: Normal Type

Number of Blocks: 1 or 2

Block Type:
A: Normal
S: Short

1.4 Specifications

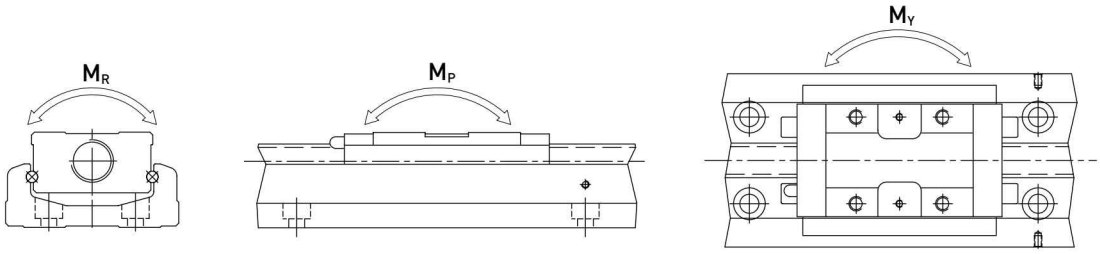

Model No.		Ballscrew				Guideway															
		Nominal Diameter (mm)	Lead (mm)	Basic Dynamic Load (N)	Basic Static Load (N)	Basic Dynamic Load Rating (N)		Basic Static Load Rating (N)		Static Rated Moment											
										Allowable Static Moment M_P (N-m) (pitching)				Allowable Static Moment M_Y (N-m) (yawing)				Allowable Static Moment M_R(N-m) (rolling)			
						Block A	Block S	Block A	Block S	Block A1	Block A2	Block S1	Block S2	Block A1	Block A2	Block S1	Block S2	Block A1	Block A2	Block S1	Block S2
KK3001	Precision	6	1	647	1088	2210	-	3510	-	14	73	-	-	14	73	-	-	41	82	-	-
	Normal			618	1079																
KK4001	Precision	8	1	735	1538	3920	-	6468	-	33	182	-	-	33	182	-	-	81	162	-	-
	Normal			676	1284																
KK5002	Precision	8	2	2136	3489	8007	-	12916	-	116	545	-	-	116	545	-	-	222	444	-	-
	Normal			1813	2910																
KK6005	Precision	12	5	3744	6243	13230	7173	21462	11574	152	760	72	367	152	760	72	367	419	838	241	482
	Normal			3377	5625																
KK6010	Precision	12	10	2410	3743	13230	7173	21462	11574	152	760	72	367	152	760	72	367	419	838	241	482
	Normal			2107	3234																
KK8010	Precision	15	10	7144	12642	31458	21051	50764	29475	622	3050	228	1309	622	3050	228	1309	1433	2866	800	1600
	Normal			6429	11387																
KK8020	Precision	15	20	4645	7655	31458	21051	50764	29475	622	3050	228	1309	622	3050	228	1309	1433	2866	800	1600
	Normal			4175	6889																
KK8610	Precision	15	10	7144	12642	31458	21051	50764	29475	622	3050	228	1309	622	3050	228	1309	1507	3014	847	1694
	Normal			6429	11387																
KK8620	Precision	15	20	4645	7655	31458	21051	50764	29475	622	3050	228	1309	622	3050	228	1309	1507	3014	847	1694
	Normal			4175	6889																
KK10020	Precision	20	20	7046	12544	39200	-	63406	-	960	4763	-	-	960	4763	-	-	2205	4410	-	-
	Normal			4782	9163																
KK13025	Precision	25	25	7897	15931	48101	-	84829		1536	7350	-	-	1536	7350	-	-	3885	7770	-	-
	Normal			7092	14352																

1.5 Accuracy Grade

Unit : mm

Model	Rail Length	Repeatability		Accuracy		Running Parallelism		Starting Torque(N-cm)	
		Precision	Normal	Precision	Normal	Precision	Normal	Precision	Normal
KK30	75	±0.003	±0.004	0.02	0.04	0.01	0.02	1.2	0.8
	100								
	125								
	150								
	175								
	200								
KK40	100	±0.003	±0.005	0.02	-	0.01	-	1.2	0.8
	150								
	200								
KK50	150	±0.003	±0.005	0.02	-	0.01	-	4	2
	200								
	250								
	300								
KK60	150	±0.003	±0.005	0.02	-	0.01	-	15	7
	200								
	300								
	400								
	500	±0.003	±0.005	0.025	-	0.015	-	15	7
	600								
KK80	340	±0.003	±0.005	0.025	-	0.015	-	15	10
	440								
	540								
	640								
	740	±0.003	±0.005	0.03	-	0.02	-	17	10
	940	±0.003	±0.005	0.04	-	0.03	-	25	10
KK86	340	±0.003	±0.005	0.025	-	0.015	-	15	10
	440								
	540								
	640								
	740	±0.003	±0.005	0.03	-	0.02	-	17	10
	940	±0.003	±0.005	0.04	-	0.03	-	25	10
KK100	980	±0.005	±0.01	0.035	-	0.025	-	17	12
	1080								
	1180	±0.005	±0.01	0.04	-	0.03	-	20	12
	1280	±0.005	±0.01	0.045	-	0.035	-	23	15
	1380			0.05		0.04		25	
KK130	980	±0.005	±0.01	0.035	-	0.025	-	25	15
	1180			0.04		0.03		25	15
	1380								
	1680	±0.007	±0.012	0.05	-	0.04	-	27	18

1.6 Maximum Speed Limit

Model	Ballscrew Lead (mm)	Rail Length (mm)	Speed (mm/sec)	
			Precision	Normal
KK30	01	75	160	160
		100	160	160
		125	160	160
		150	160	160
		175	160	160
		200	160	160
KK40	01	100	190	190
		150	190	190
		200	190	190
KK50	02	150	270	270
		200	270	270
		250	270	270
		300	270	270
KK60	05	150	550	390
		200	550	390
		300	550	390
		400	550	390
		500	550	390
		600	340	340
	10	150	1100	790
		200	1100	790
		300	1100	790
		400	1100	790
		500	1100	790
		600	670	670
KK80	10	340	740	520
		440	740	520
		540	740	520
		640	740	520
		740	740	520
		940	610	430
	20	340	1480	1050
		440	1480	1050
		540	1480	1050
		640	1480	1050
		740	1480	1050
		940	1220	870
KK86	10	340	740	520
		440	740	520
		540	740	520
		640	740	520
		740	740	520
		940	610	430
	20	340	1480	1050
		440	1480	1050
		540	1480	1050
		640	1480	1050
		740	1480	1050
		940	1220	870
KK100	20	980	1120	800
		1080	980	800
		1180	750	750
		1280	630	630
		1380	530	530
KK130	25	980	1120	800
		1180	1120	800
		1380	830	800
		1680	550	550

1.7 Life Calculations

1.7.1 Service Life

Under repeated stress between the raceway and the rolling elements, pitting and flaking will occur as it reaches fatigue failure. The service life of the KK Single Axis Robot is defined as the distanced traveled before any failure of the raceway or rolling elements appear.

1.7.2 Nominal Life (L)

The service life varies greatly even when the KK units are manufactured in the same way or operated under the same conditions. For this reason, nominal life is used as the criteria for predicting the service life of a KK unit.

1.7.3 Nominal Life Calculation

The calculating formulas are divided into two parts, guideway and ballscrew. The smaller value of the two would be the recommended nominal life of the KK unit.
Nominal life formulas for both the guideway and ballscrew depend on several parameters and are shown below.

Guideway

$$L = \left(\frac{f_t}{f_w} \cdot \frac{C}{P_n} \right)^3 \text{x } 50 \text{ km}$$

L : Life Rating (km)
f_t : Contact Coefficient (ref. Table 1)
f_w : Loading Coefficient (ref. Table 2)
C : Basic Dynamic Load Rating (N)
P_n : Calculated Loading (N)

Table 1

Block Type	Contact Coefficient f_t
A1, S1	1.0
A2, S2	0.81

Table 2

Operating Condition		Loading Coefficient f_w
Thrust and Vibration	Velocity (V)	
No Thrust	V < 15m/min	1.0 ~ 1.5
Low Vibration	15m/min < V < 60m/min	1.5 ~ 2.0
High Vibration	V > 60m/min	2.0 ~ 3.5

Ballscrew and Bearing

$$L = \left(\frac{1}{f_w} \cdot \frac{C_a}{P_{a,n}} \right)^3 \text{x } 10^6 \text{ rev}$$

L : Life Rating (rev.)
f_w : Loading Coefficient (ref. Table 2)
C_a : Basic Dynamic Load Rating (N)
$P_{a,n}$: Axial Loading (N)

1.8 Lubrication

Insufficient lubrication of the guideway would lead to a reduction of the service life.
The lubricant provides the following functions:
- Reducing rolling friction and avoiding abrasion
- Providing a lubricating film and extending the service life
- Anti-rusting

1.8.1 Lubricating Grease

Re-lubricating the KK Single Axis Robot every 100km is recommened. Generally, grease is applied for speeds under 60 m/min. For operating speeds over 60 m/min, a grease with a higher viscosity should be used.

$$T = \frac{100 \times 1000}{V_e \times 60}$$

T : Lubricating frequency (hrs)
Ve : Speed (m/min)

1.8.2 Grease Nipple

1 Block

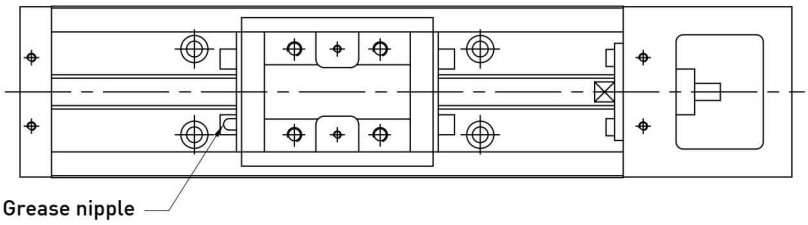

2 Blocks

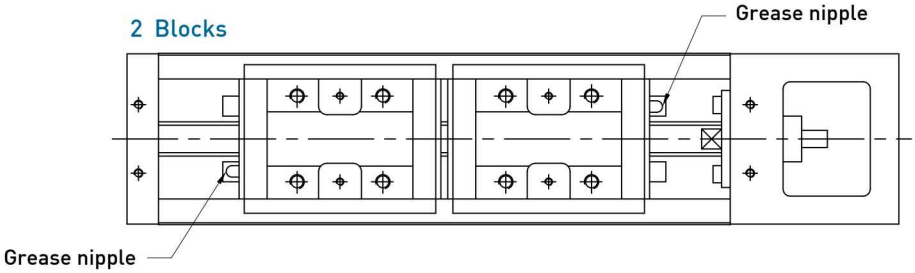

Types of grease nipple

KK40

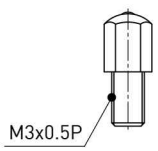

NO. 34310010

KK50
KK60
KK80
KK86

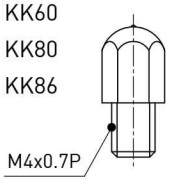

NO. 34310002

KK100
KK130

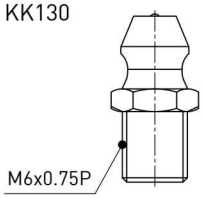

NO. 34310008

1.9 Dimensions

1.9.1 Without cover

KK30

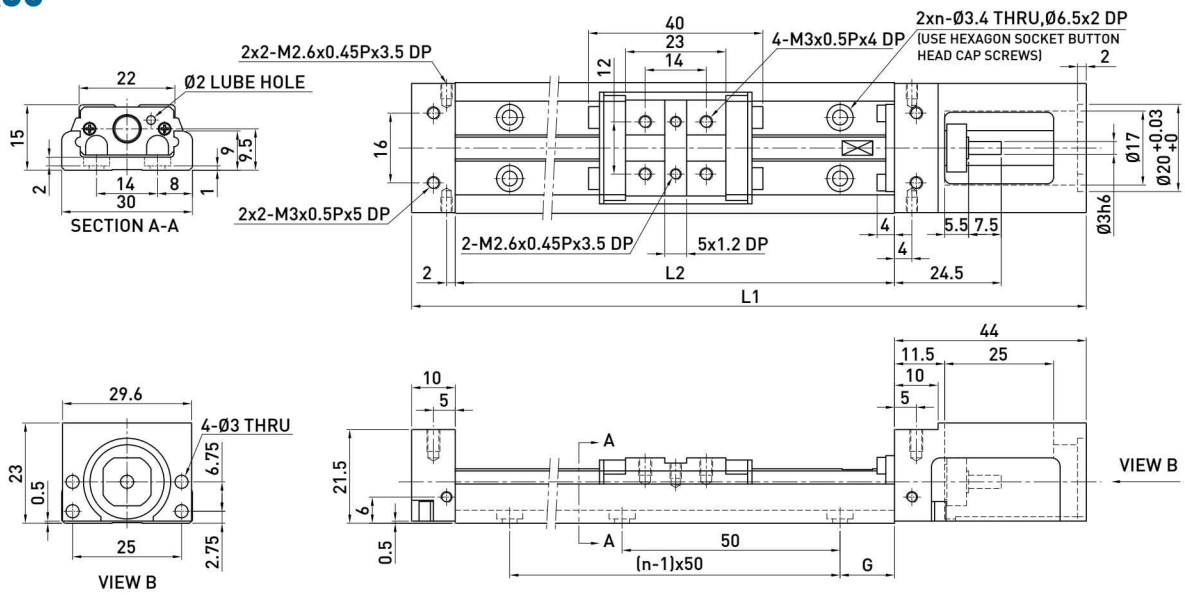

Rail Length L2 (mm)	Total Length L1 (mm)	Maximum Stroke (mm)		G (mm)	n	Mass (kg)	
		A1 Block	A2 Block			A1 Block	A2 Block
75	129	31	-	12.5	2	0.2	-
100	154	56	-	25	2	0.23	-
125	179	81	45	12.5	3	0.26	0.3
150	204	106	70	25	3	0.29	0.33
175	229	131	95	12.5	4	0.32	0.36
200	254	156	120	25	4	0.35	0.39

KK40

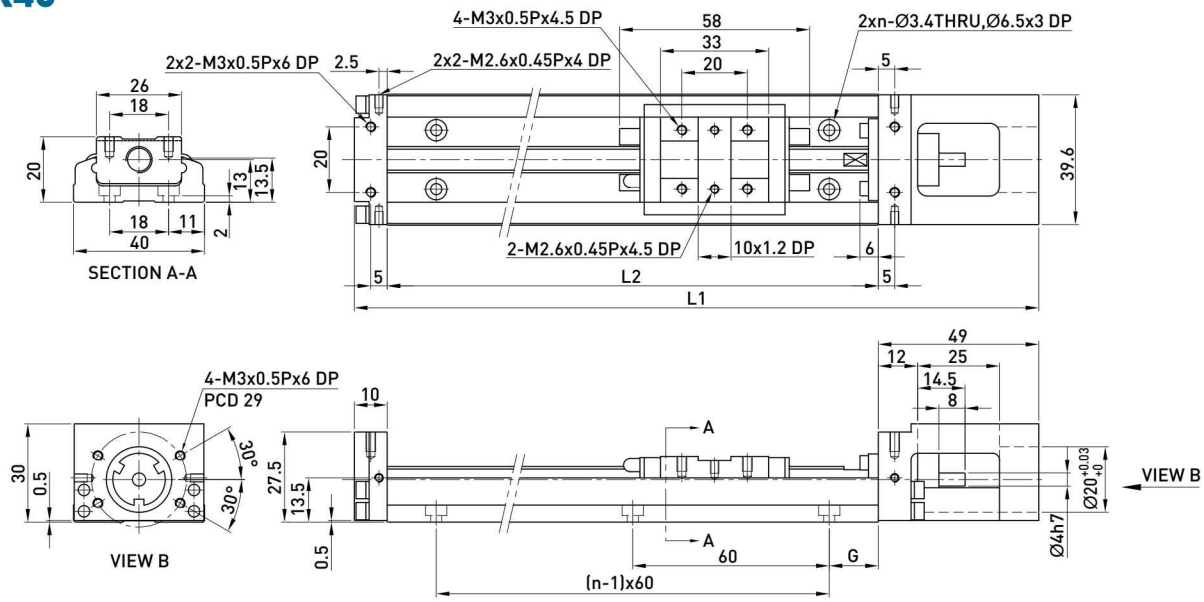

Rail Length L2 (mm)	Total Length L1 (mm)	Maximum Stroke (mm)		G (mm)	n	Mass (kg)	
		A1 Block	A2 Block			A1 Block	A2 Block
100	159	36	-	20	2	0.48	-
150	209	86	34	15	3	0.6	0.67
200	259	136	84	40	3	0.72	0.79

KK50

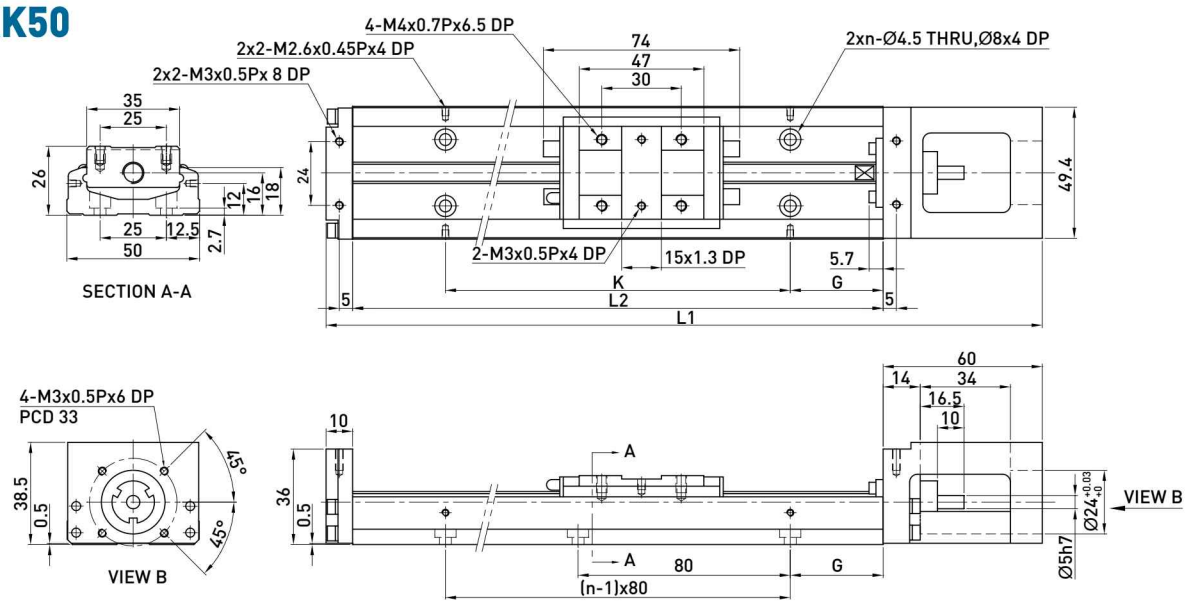

Rail Length L2 (mm)	Total Length L1 (mm)	Maximum Stroke (mm)		G (mm)	K (mm)	n	Mass (kg)	
		A1 Block	A2 Block				A1 Block	A2 Block
150	220	70	-	35	80	2	1	-
200	270	120	55	20	160	3	1.2	1.4
250	320	170	105	45	160	3	1.4	1.6
300	370	220	155	30	240	4	1.6	1.8

KK60 (Standard)

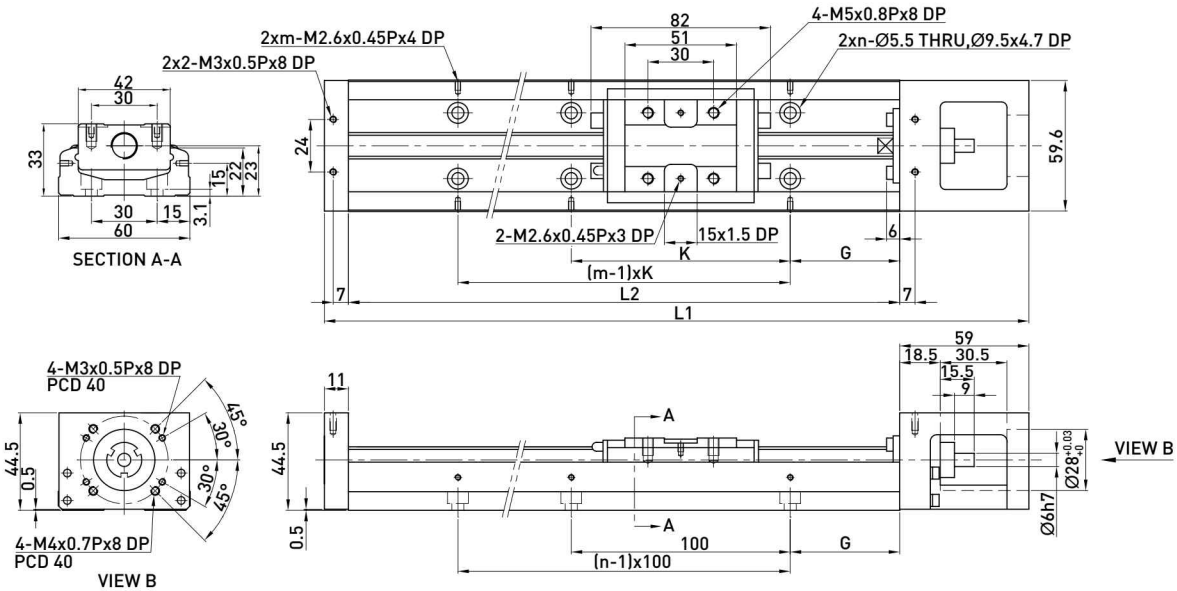

Rail Length L2 (mm)	Total Length L1 (mm)	Maximum Stroke (mm)		G (mm)	K (mm)	n	m	Mass (kg)	
		A1 Block	A2 Block					A1 Block	A2 Block
150	220	60	-	25	100	2	2	1.5	-
200	270	110	-	50	100	2	2	1.8	-
300	370	210	135	50	200	3	2	2.4	2.7
400	470	310	235	50	100	4	4	3	3.3
500	570	410	335	50	200	5	3	3.6	3.9
600	670	510	435	50	100	6	6	4.2	4.6

Note:Special ballscrew spindle end of 8 mm diameter is available, please contact hiwin if necessary.

KK60 (Light Duty)

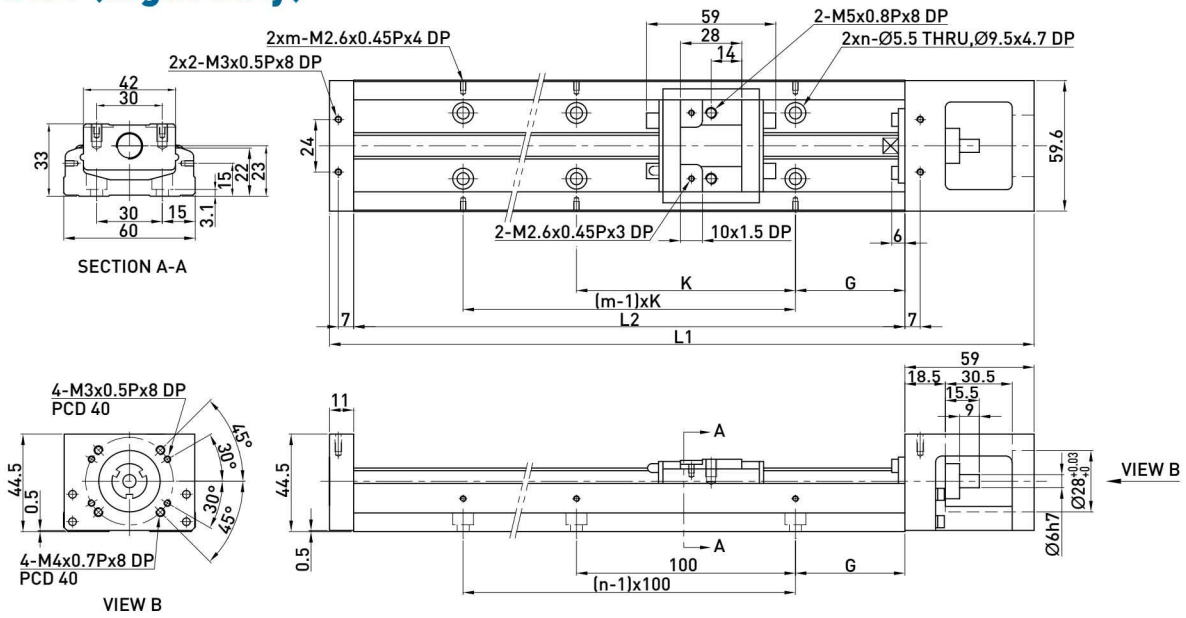

Rail Length L2 (mm)	Total Length L1 (mm)	Maximum Stroke (mm)		G (mm)	K (mm)	n	m	Mass (kg)	
		S1 Block	S2 Block					S1 Block	S2 Block
150	220	85	34	25	100	2	2	1.4	1.6
200	270	135	84	50	100	2	2	1.7	1.9
300	370	235	184	50	200	3	2	2.3	2.5
400	470	335	284	50	100	4	4	2.9	3.1
500	570	435	384	50	200	5	3	3.5	3.7
600	670	535	484	50	100	6	6	4.1	4.3

Note:Special ballscrew spindle end of 8 mm diameter is available, please contact hiwin if necessary.

KK80 (Standard)

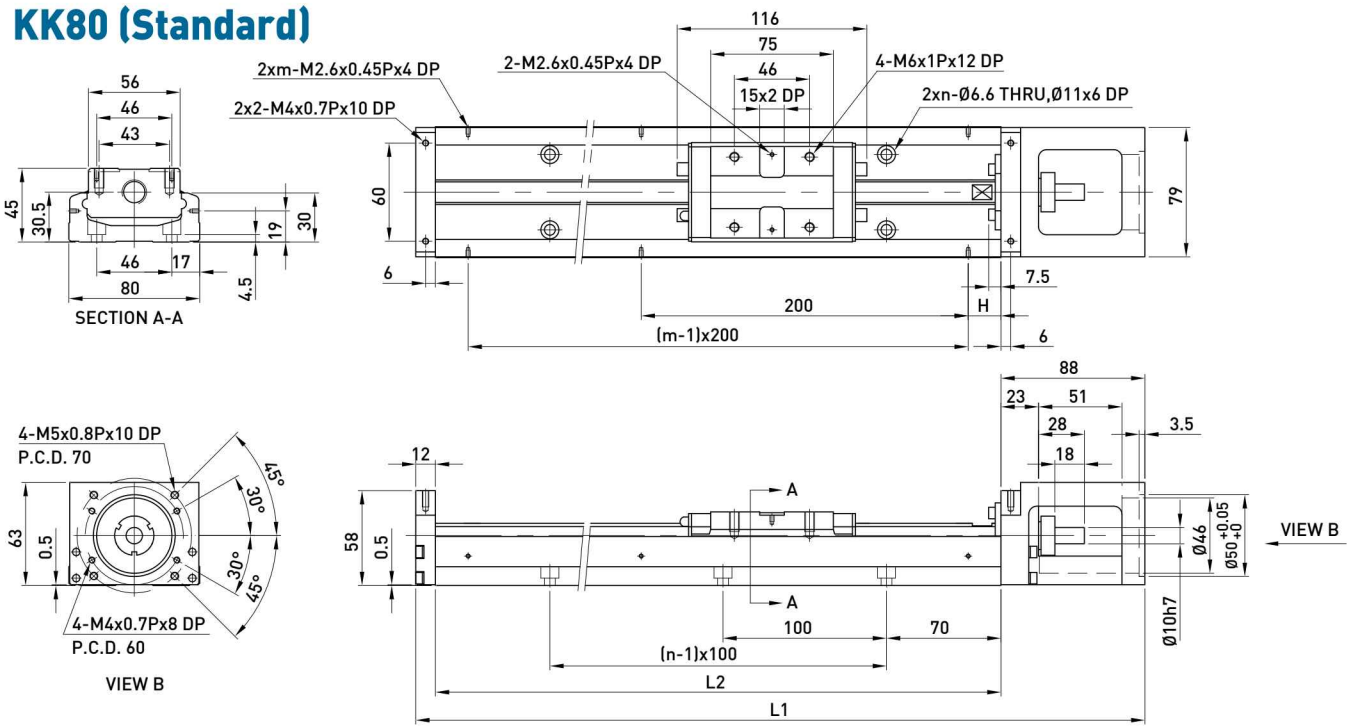

Rail Length L2 (mm)	Total Length L1 (mm)	Maximum Stroke (mm)		H (mm)	n	m	Mass (kg)	
		A1 Block	A2 Block				A1 Block	A2 Block
340	440	216.5	108.5	70	3	2	5.3	6
440	540	316.5	208.5	20	4	3	6.5	7.2
540	640	416.5	308.5	70	5	3	7.6	8.3
640	740	516.5	408.5	20	6	4	8.8	9.5
740	840	616.5	508.5	70	7	4	10	10.7
940	1040	816.5	708.5	70	9	5	12.4	13.1

KK80 (Light Duty)

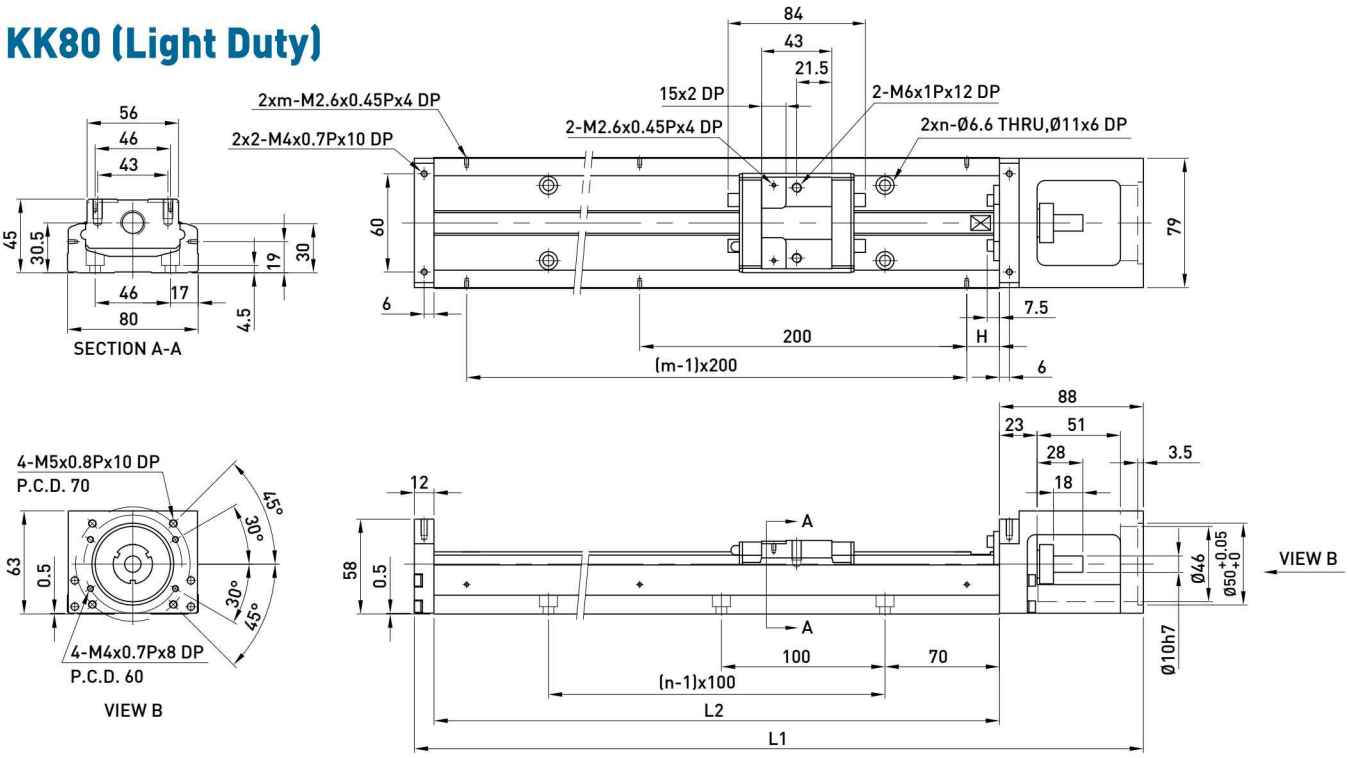

Rail Length L2 (mm)	Total Length L1 (mm)	Maximum Stroke (mm)		H (mm)	n	m	Mass (kg)	
		S1 Block	S2 Block				S1 Block	S2 Block
340	440	248.5	172.5	70	3	2	5	5.4
440	540	348.5	272.5	20	4	3	6.2	6.6
540	640	448.5	372.5	70	5	3	7.3	7.7
640	740	548.5	472.5	20	6	4	8.5	8.9
740	840	648.5	572.5	70	7	4	9.7	10.1
940	1040	848.5	772.5	70	9	5	12.1	12.5

KK86 (Standard)

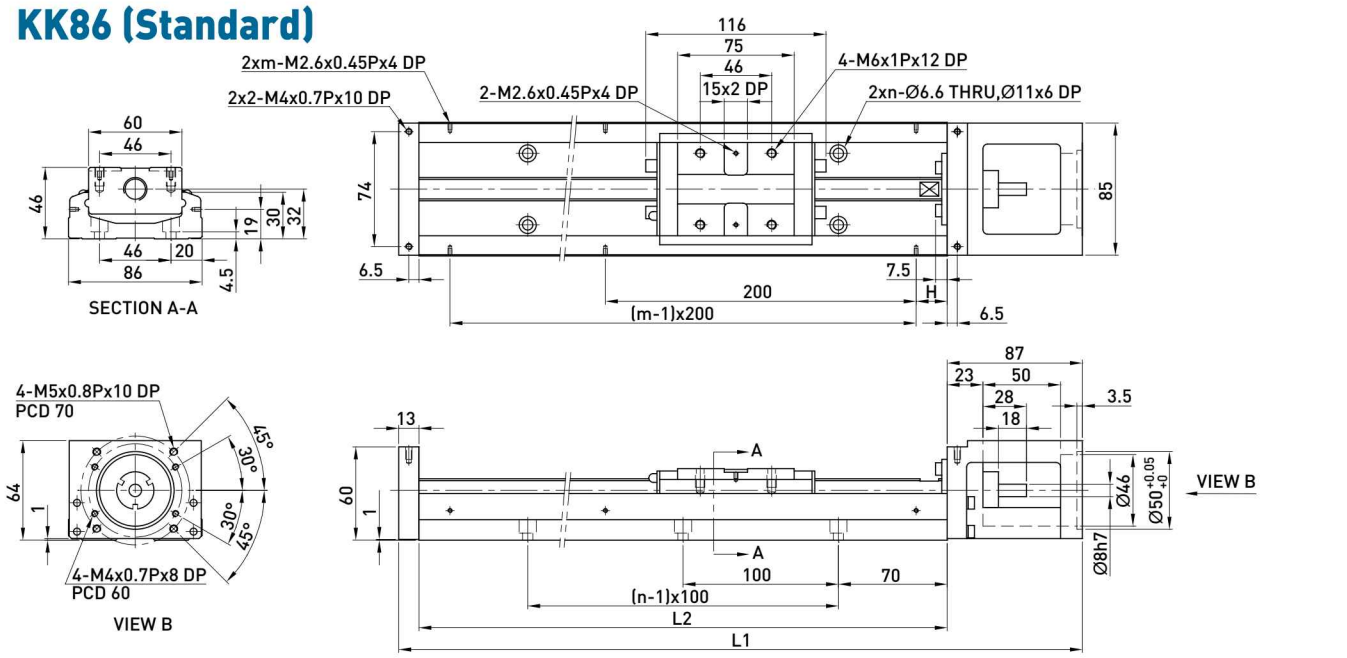

Rail Length L2 (mm)	Total Length L1 (mm)	Maximum Stroke (mm)		H (mm)	n	m	Mass (kg)	
		A1 Block	A2 Block				A1 Block	A2 Block
340	440	216.5	108.5	70	3	2	5.7	6.5
440	540	316.5	208.5	20	4	3	6.9	7.7
540	640	416.5	308.5	70	5	3	8.0	8.8
640	740	516.5	408.5	20	6	4	9.2	10.0
740	840	616.5	508.5	70	7	4	10.4	11.2
940	1040	816.5	708.5	70	9	5	11.6	12.4

Note:Special ballscrew spindle end of 10 mm diameter is available, please contact hiwin if necessary.

KK86 (Light Duty)

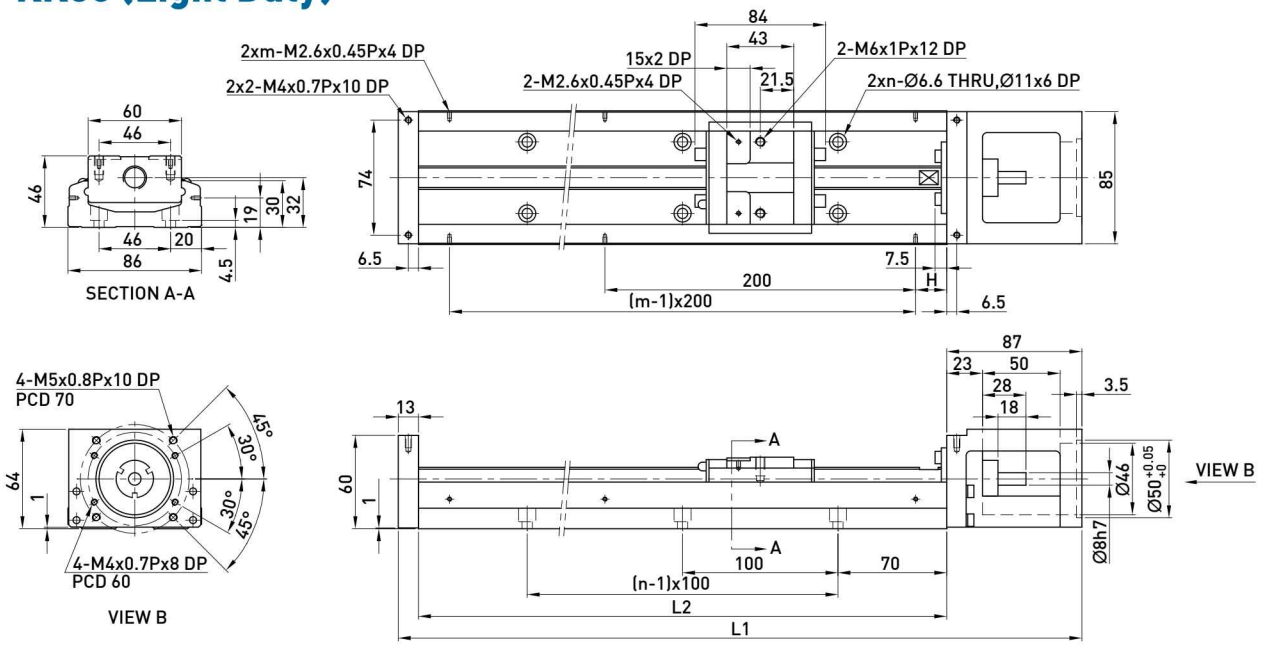

Rail Length L2 (mm)	Total Length L1 (mm)	Maximum Stroke (mm)		H (mm)	n	m	Mass (kg)	
		S1 Block	S2 Block				S1 Block	S2 Block
340	440	248.5	172.5	70	3	2	5.4	5.9
440	540	348.5	272.5	20	4	3	6.6	7.1
540	640	448.5	372.5	70	5	3	7.7	8.2
640	740	548.5	472.5	20	6	4	8.9	9.4
740	840	648.5	572.5	70	7	4	10.1	10.6
940	1040	848.5	772.5	70	9	5	11.3	11.8

Note:Special ballscrew spindle end of 10 mm diameter is available, please contact hiwin if necessary.

KK100

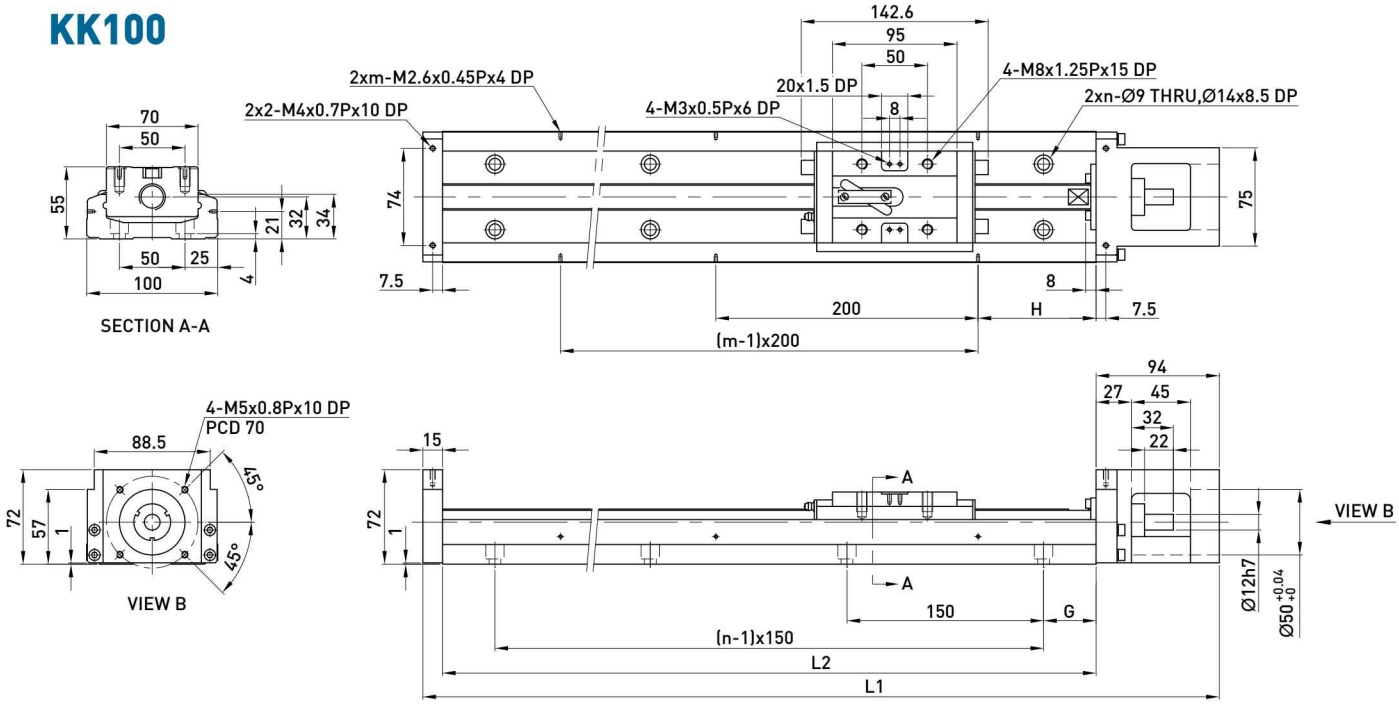

Rail Length L2 (mm)	Total Length L1 (mm)	Maximum Stroke (mm)		G (mm)	H (mm)	n	m	Mass (kg)	
		A1 Block	A2 Block					A1 Block	A2 Block
980	1089	828	700	40	90	7	5	18.6	20.3
1080	1189	928	800	15	40	8	6	20.3	22.0
1180	1289	1028	900	65	90	8	6	22.0	23.7
1280	1389	1128	1000	40	40	9	7	23.6	25.3
1380	1489	1228	1100	15	90	10	7	25.3	27.0

KK130

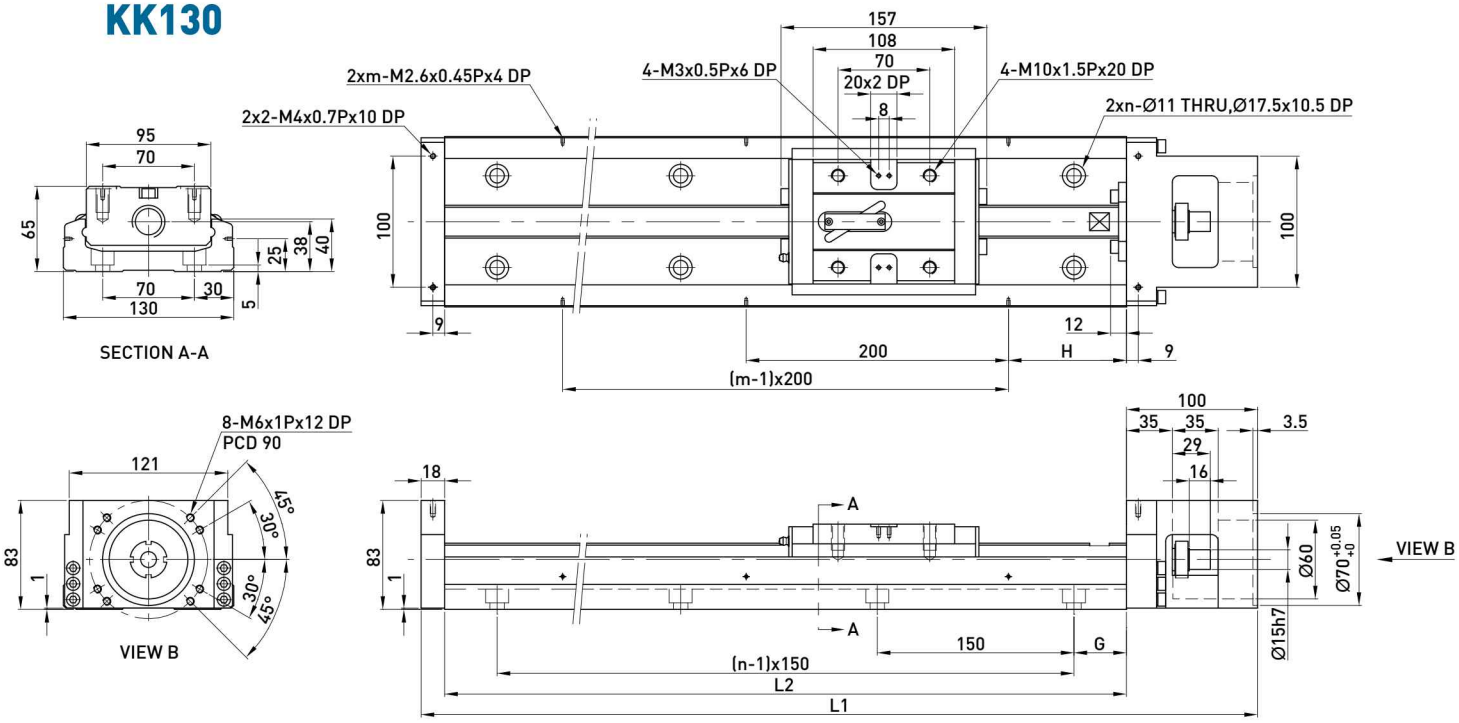

Rail Length L2 (mm)	Total Length L1 (mm)	Maximum Stroke (mm)		G (mm)	H (mm)	n	m	Mass (kg)	
		A1 Block	A2 Block					A1 Block	A2 Block
980	1098	811	659	40	90	7	5	29.4	32.3
1180	1298	1011	859	65	90	8	6	34.3	37.2
1380	1498	1211	1059	90	90	9	7	39.2	42.1
1680	1798	1511	1359	90	40	11	9	46.5	49.4

1.9.2 With cover

KK30

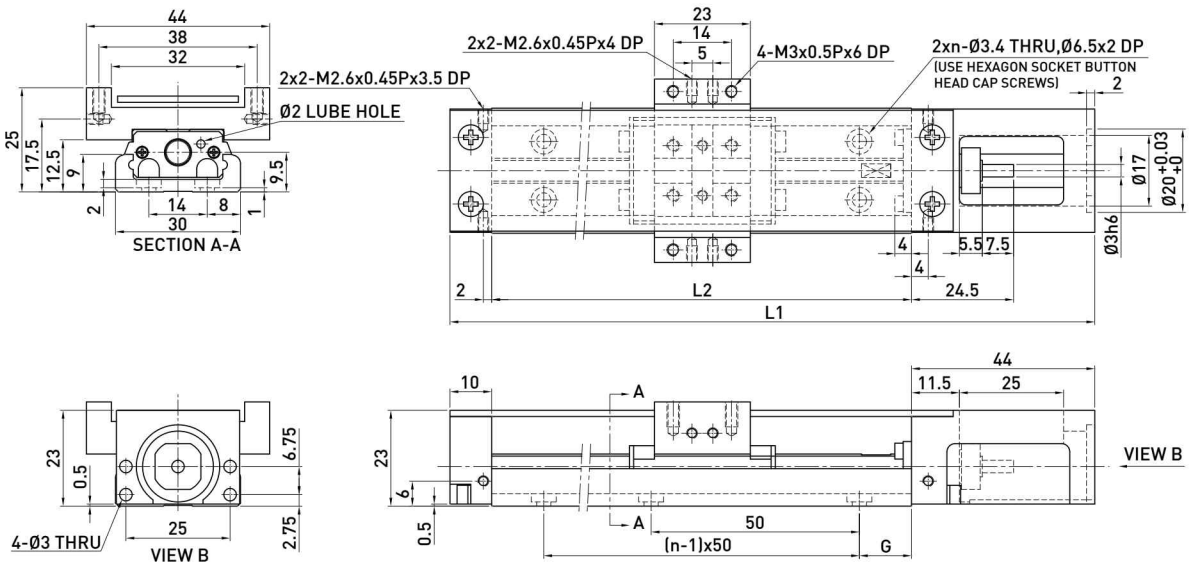

Rail Length L2 (mm)	Total Length L1 (mm)	Maximum Stroke (mm)		G (mm)	n	Mass (kg)	
		A1 Block	A2 Block			A1 Block	A2 Block
75	129	31	-	12.5	2	0.2	-
100	154	56	-	25	2	0.23	-
125	179	81	45	12.5	3	0.26	0.3
150	204	106	70	25	3	0.29	0.33
175	229	131	95	12.5	4	0.32	0.36
200	254	156	120	25	4	0.35	0.39

KK40

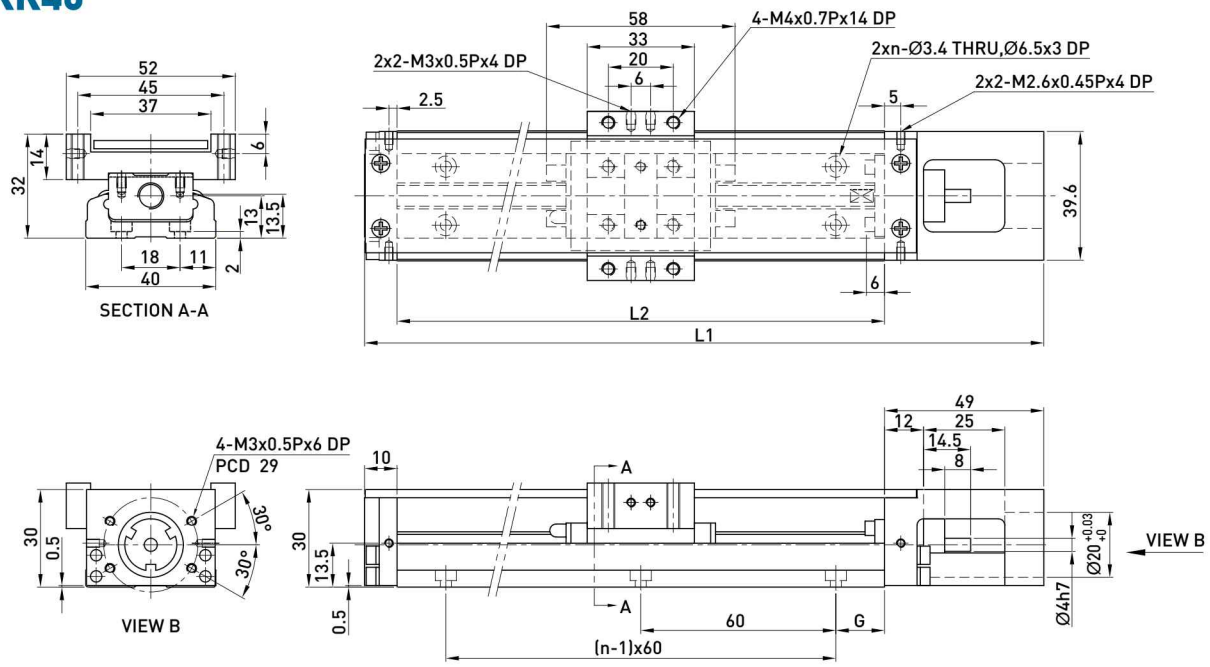

Rail Length L2 (mm)	Total Length L1 (mm)	Maximum Stroke (mm)		G (mm)	n	Mass (kg)	
		A1 Block	A2 Block			A1 Block	A2 Block
100	159	36	-	20	2	0.55	-
150	209	86	34	15	3	0.68	0.76
200	259	136	84	40	3	0.82	0.89

KK50

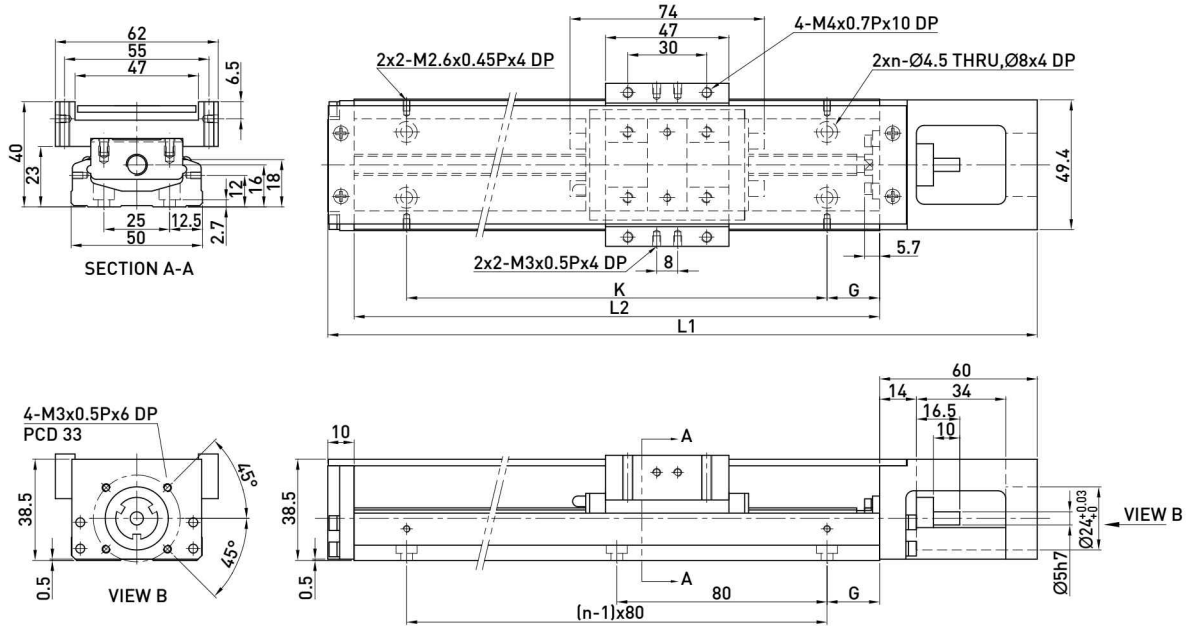

Rail Length L2 (mm)	Total Length L1 (mm)	Maximum Stroke (mm)		G (mm)	K (mm)	n	Mass (kg)	
		A1 Block	A2 Block				A1 Block	A2 Block
150	220	70	-	35	80	2	1.1	-
200	270	120	55	20	160	3	1.3	1.5
250	320	170	105	45	160	3	1.6	1.8
300	370	220	155	30	240	4	1.8	2.0

KK60 (Standard)

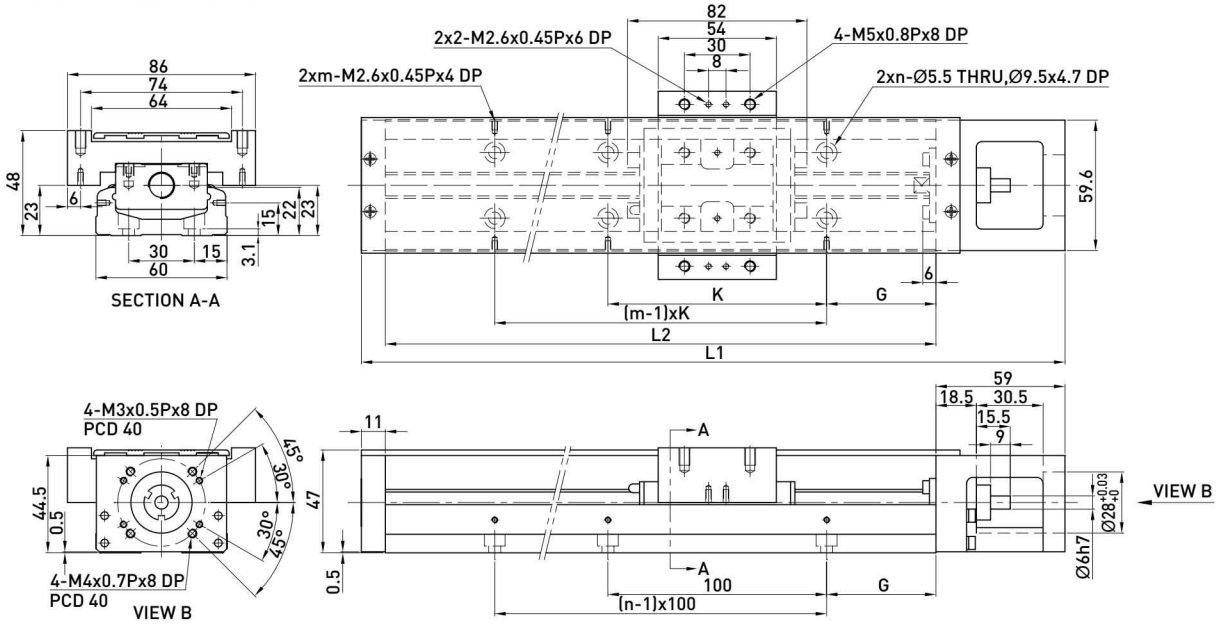

Rail Length L2 (mm)	Total Length L1 (mm)	Maximum Stroke (mm)		G (mm)	K (mm)	n	m	Mass (kg)	
		A1 Block	A2 Block					A1 Block	A2 Block
150	220	60	-	25	100	2	2	1.7	-
200	270	110	-	50	100	2	2	2.1	-
300	370	210	135	50	200	3	2	2.7	3.0
400	470	310	235	50	100	4	4	3.3	3.6
500	570	410	335	50	200	5	3	3.9	4.2
600	670	510	435	50	100	6	6	4.6	5.0

Note:Special ballscrew spindle end of 8 mm diameter is available, please contact hiwin if necessary.

KK60 (Light Duty)

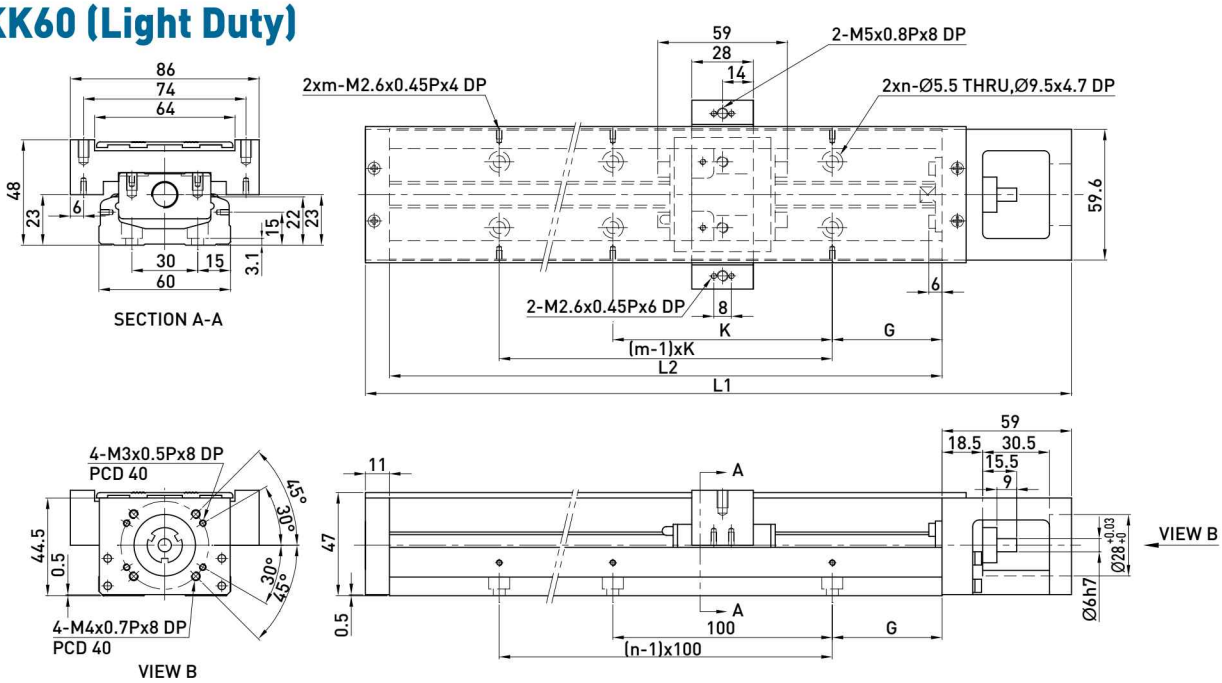

Rail Length L2 (mm)	Total Length L1 (mm)	Maximum Stroke (mm)		G (mm)	K (mm)	n	m	Mass (kg)	
		S1 Block	S2 Block					S1 Block	S2 Block
150	220	85	34	25	100	2	2	1.6	1.8
200	270	135	84	50	100	2	2	1.9	2.1
300	370	235	184	50	200	3	2	2.5	2.7
400	470	335	284	50	100	4	4	3.1	3.3
500	570	435	384	50	200	5	3	3.7	3.9
600	670	535	484	50	100	6	6	4.4	4.6

Note:Special ballscrew spindle end of 8 mm diameter is available, please contact hiwin if necessary.

KK80 (Standard)

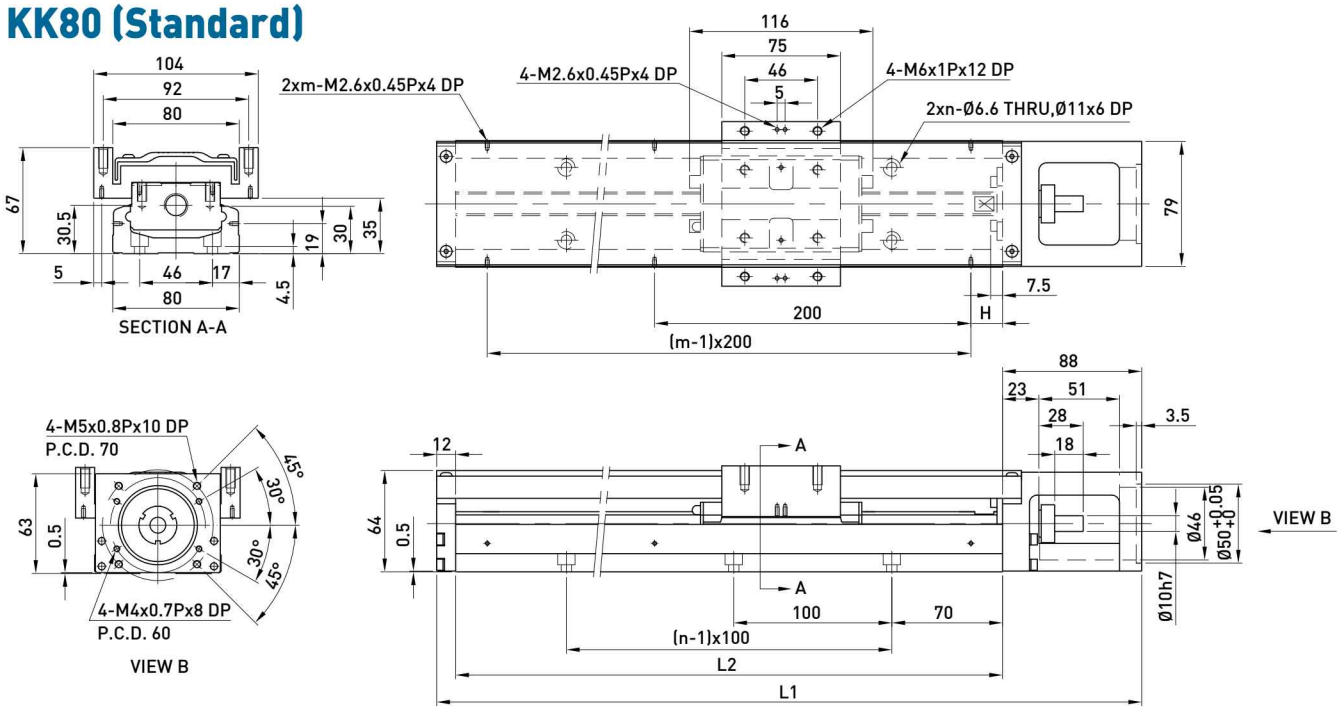

Rail Length L2 (mm)	Total Length L1 (mm)	Maximum Stroke (mm)		H (mm)	n	m	Mass (kg)	
		A1 Block	A2 Block				A1 Block	A2 Block
340	440	216.5	108.5	70	3	2	6	7.1
440	540	316.5	208.5	20	4	3	7.2	8.3
540	640	416.5	308.5	70	5	3	8.4	9.5
640	740	516.5	408.5	20	6	4	9.7	10.8
740	840	616.5	508.5	70	7	4	10.9	12
940	1040	816.5	708.5	70	9	5	13.5	14.6

KK80 (Light Duty)

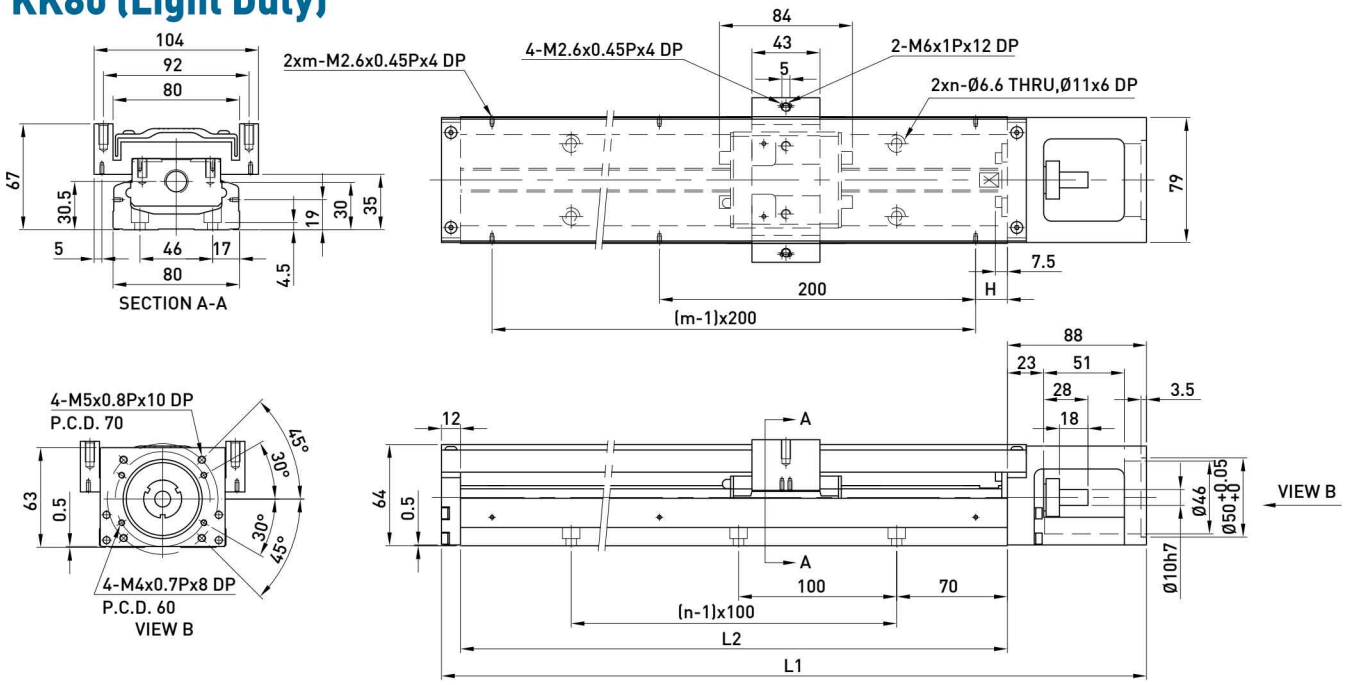

Rail Length L2 (mm)	Total Length L1 (mm)	Maximum Stroke (mm)		H (mm)	n	m	Mass (kg)	
		S1 Block	S2 Block				S1 Block	S2 Block
340	440	248.5	172.5	70	3	2	5.5	6.1
440	540	348.5	272.5	20	4	3	6.8	7.4
540	640	448.5	372.5	70	5	3	7.9	8.5
640	740	548.5	472.5	20	6	4	9.2	9.8
740	840	648.5	572.5	70	7	4	10.5	11.1
940	1040	848.5	772.5	70	9	5	13	13.6

KK86 (Standard)

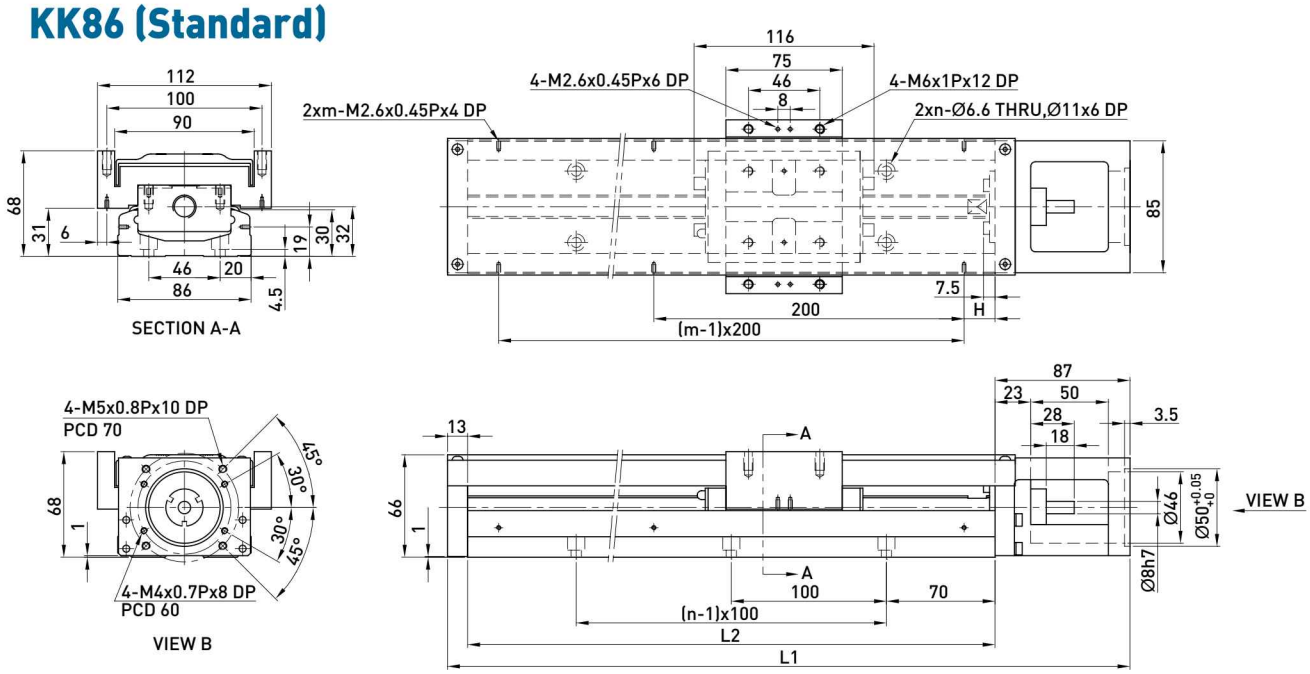

Rail Length L2 (mm)	Total Length L1 (mm)	Maximum Stroke (mm)		H (mm)	n	m	Mass (kg)	
		A1 Block	A2 Block				A1 Block	A2 Block
340	440	216.5	108.5	70	3	2	6.5	7.3
440	540	316.5	208.5	20	4	3	7.8	8.6
540	640	416.5	308.5	70	5	3	9.0	9.8
640	740	516.5	408.5	20	6	4	10.3	11.3
740	840	616.5	508.5	70	7	4	11.6	12.4
940	1040	816.5	708.5	70	9	5	13.0	13.8

Note:Special ballscrew spindle end of 10 mm diameter is available, please contact hiwin if necessary.

KK86 (Light Duty)

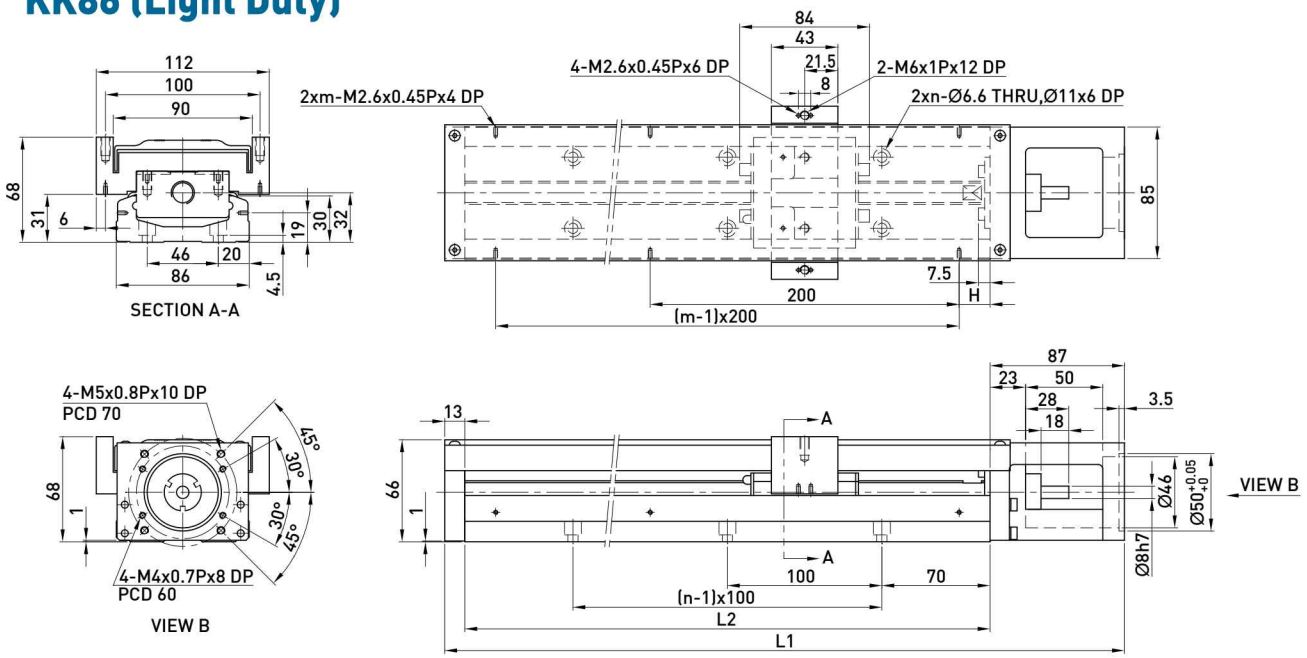

Rail Length L2 (mm)	Total Length L1 (mm)	Maximum Stroke (mm)		H (mm)	n	m	Mass (kg)	
		S1 Block	S2 Block				S1 Block	S2 Block
340	440	248.5	172.5	70	3	2	6.3	7.1
440	540	348.5	272.5	20	4	3	7.6	8.4
540	640	448.5	372.5	70	5	3	8.8	9.6
640	740	548.5	472.5	20	6	4	10.1	11.1
740	840	648.5	572.5	70	7	4	11.4	12.2
940	1040	848.5	772.5	70	9	5	12.8	13.6

Note:Special ballscrew spindle end of 10 mm diameter is available, please contact hiwin if necessary.

KK100

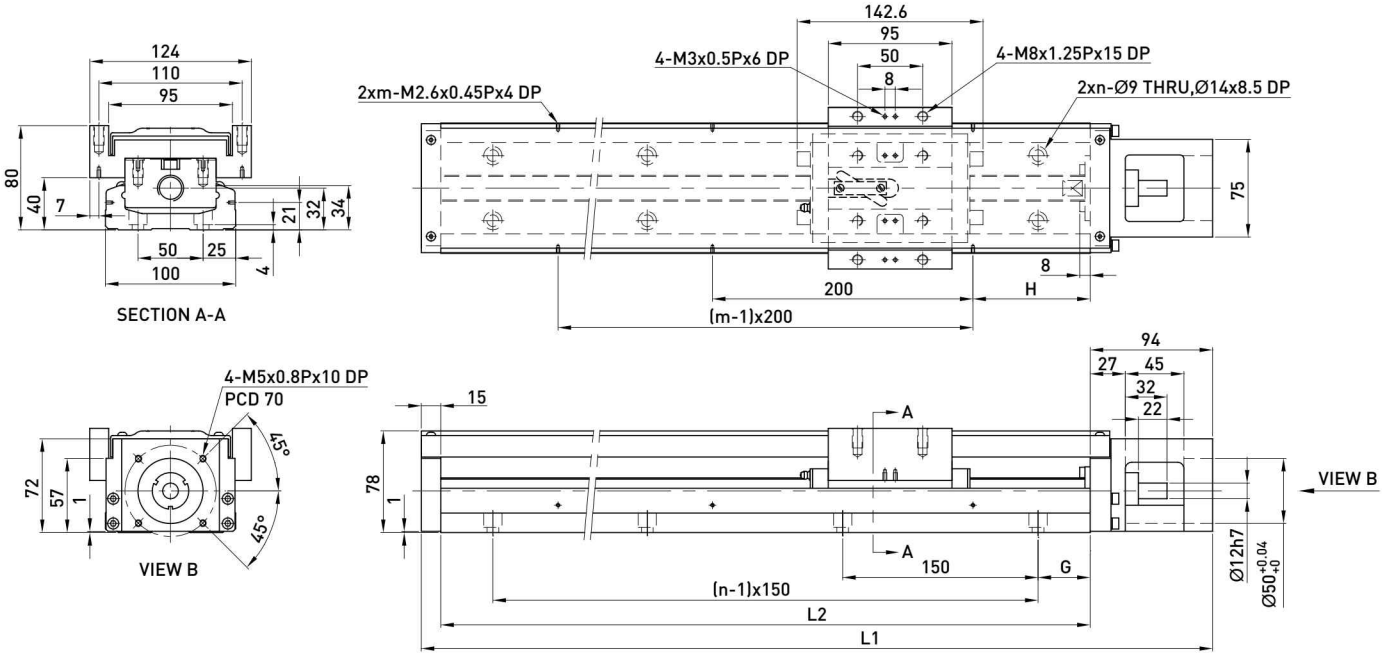

Rail Length L2 (mm)	Total Length L1 (mm)	Maximum Stroke (mm)		G (mm)	H (mm)	n	m	Mass (kg)	
		A1 Block	A2 Block					A1 Block	A2 Block
980	1089	828	700	40	90	7	5	20.4	22.1
1080	1189	928	800	15	40	8	6	22.2	23.9
1180	1289	1028	900	65	90	8	6	24.0	25.7
1280	1389	1128	1000	40	40	9	7	25.7	27.4
1380	1489	1228	1100	15	90	10	7	27.5	29.2

KK130

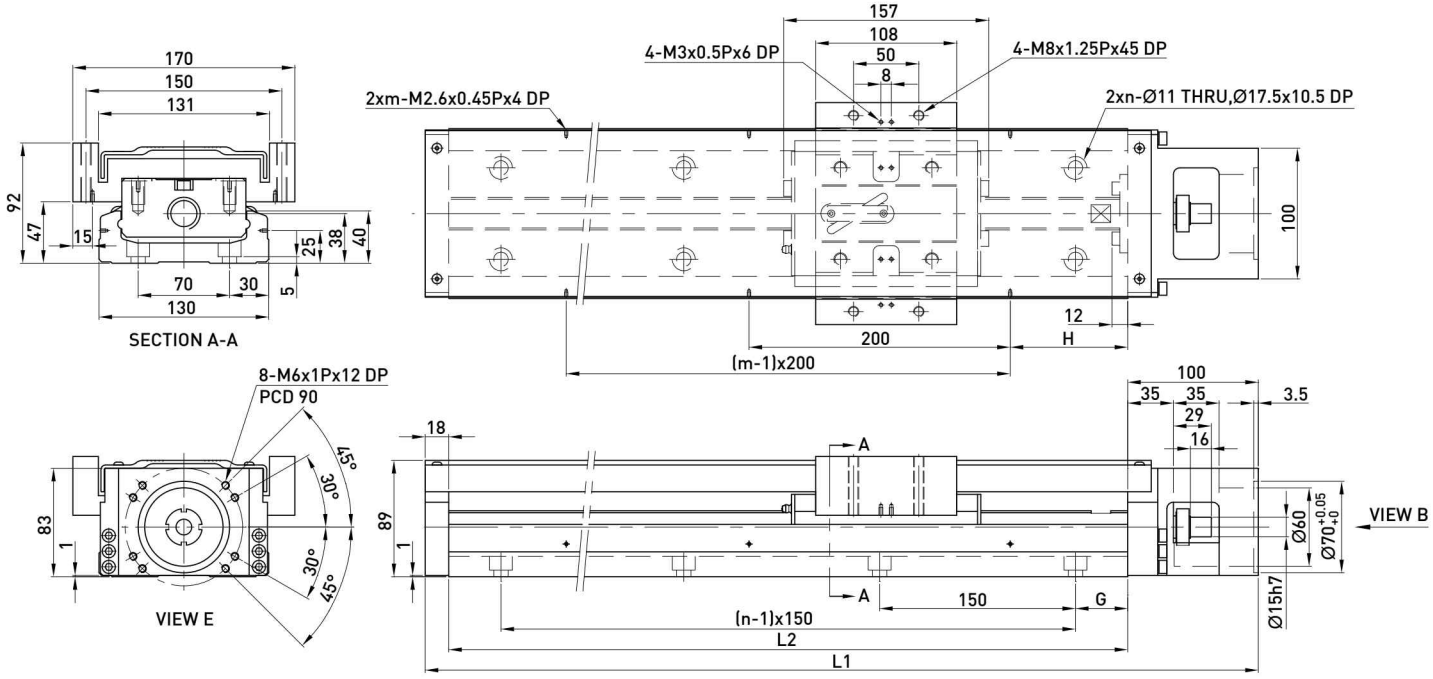

Rail Length L2 (mm)	Total Length L1 (mm)	Maximum Stroke (mm)		G (mm)	H (mm)	n	m	Mass (kg)	
		A1 Block	A2 Block					A1 Block	A2 Block
980	1098	811	659	40	90	7	5	31.9	35.9
1180	1298	1011	859	65	90	8	6	37.1	41.1
1380	1498	1211	1059	90	90	9	7	42.2	46.2
1680	1798	1511	1359	90	40	11	9	49.9	53.9

1.10 Motor Housing and Motor Adaptor Flange

1.10.1 Motor Selection

HIWIN Mikrosystem Servo Motor

Motor Output	Motor	Weight (kg)	Flange Selection								+Brake Weight (kg)	Driver	Weight (kg)	Remarks
			KK30	KK40	KK50	KK60	KK80	KK86	KK100	KK130				
50W	FRLS052□□A4□	0.45	-	F2	F2	F2	F3	F3	-	-	0.58			220V
100W	FRLS102□□A4□	0.6	-	F2	F2	F2	F3	F3	-	-	0.76			220V
200W	FRLS202□□06□	1	-	-	-	-	F0	F0	F0	F1	1.5	D2	1.25	220V
400W	FRLS402□□06□	1.45	-	-	-	-	F0	F0	F0	F1	1.86			220V
750W	FRMS752□□08□	2.66	-	-	-	-	-	-	F1	F2	3.32			220V

Mitsubishi Servo Motor

Motor Output	Motor	Weight (kg)	Flange Selection								+Brake Weight (kg)	Driver	Weight (kg)	Remarks
			KK30	KK40	KK50	KK60	KK80	KK86	KK100	KK130				
10W	HC-AQ0135D	0.19	F1	-	-	-	-	-	-	-	0.29	M2-JR-03A5	0.2	
20W	HC-AQ0235D	0.22	F1	-	-	-	-	-	-	-	0.32	M2-JR-03A5	0.2	
50W	HF-KP053	0.35	-	F1	F1	F1	F2	F2	-	-	0.75	MR-J3S-10A	0.8	220V
100W	HF-KP13	0.56	-	F1	F1	F1	F2	F2	-	-	0.89	MR-J3S-10A	0.8	220V
200W	HF-KP23	0.94	-	-	-	-	F0	F0	F0	F1	1.6	MR-J3S-20A	0.8	220V
400W	HF-KP43	1.5	-	-	-	-	F0	F0	F0	F1	2.1	MR-J3S-40A	1	220V
750W	HF-KP73	2.9	-	-	-	-	-	-	F1	F2	4	MR-J3S-70A	1.4	220V

Panasonic Servo Motor

Motor Output	Motor	Weight (kg)	Flange Selection								+Brake Weight (kg)	Driver	Weight (kg)	Remarks
			KK30	KK40	KK50	KK60	KK80	KK86	KK100	KK130				
50W	MSMD5AZP1	0.32	-	F2	F2	F2	F3	F3	-	-	0.53	MADDT1105	0.8	110V
50W	MSMD5AZP1	0.32	-	F2	F2	F2	F3	F3	-	-	0.53	MADDT1205	0.8	220V
100W	MSMD011P1	0.47	-	F2	F2	F2	F3	F3	-	-	0.68	MADDT1107	0.8	110V
100W	MSMD012P1	0.47	-	F2	F2	F2	F3	F3	-	-	0.68	MADDT1205	0.8	220V
200W	MSMD021P1	0.82	-	-	-	-	F1	F1	-	-	1.3	MADDT2110	1.1	110V
200W	MSMD022P1	0.82	-	-	-	-	F1	F1	-	-	1.3	MADDT1207	0.8	220V
400W	MSMD041P1	1.2	-	-	-	-	F1	F1	-	-	1.7	MADDT3120	1.5	110V
400W	MSMD042P1	1.2	-	-	-	-	F1	F1	-	-	1.7	MADDT2210	1.1	220V
750W	MSMD082S1	2.3	-	-	-	-	F4	F4	F2	F4	3.1	MADDT3520	1.5	220V

Yasukawa Servo Motor

Motor Output	Motor	Weight (kg)	Flange Selection								+Brake Weight (kg)	Driver	Weight (kg)	Remarks
			KK30	KK40	KK50	KK60	KK80	KK86	KK100	KK130				
10W	SGMMV-A1A2A21	0.13	F2	-	-	-	-	-	-	-	0.215	SGDV-R90A01A	0.9	220V
20W	SGMMV-A2A2A21	0.17	F2	-	-	-	-	-	-	-	0.27	SGDV-R90A01A	0.9	220V
50W	SGMAV-A5ADA61	0.3	-	F1	F1	F1	F2	F2	-	-		SGDV-R70A01A	0.9	with key
50W	SGMAV-A5ADA2C	0.3	-	F1	F1	F1	F2	F2	-	-		SGDV-R70A01A	0.9	no key
50W	SGMAV-A5ADA21	0.3	-	F1	F1	F1	F2	F2	-	-	0.75	SGDV-R70A01A	0.9	Mid inertia
100W	SGMAV-01ADA64	0.4	-	F1	F1	F1	F2	F2	-	-	0.89	SGDV-R90A01A	0.9	
200W	SGMAV-02ADA65	0.9	-	-	-	-	F0	F0	F0	F1	1.6	SGDV-1R6A01A	0.9	
400W	SGMAV-04ADA66	1.2	-	-	-	-	F0	F0	F0	F1	2.1	SGDV-2R8A01A	1	
750W	SGMAV-08ADA67	2.6	-	-	-	-			F1	F2	4	SGDV-5R5A01A	1.5	

HIWIN Mikosystem Step Motor

Series	Model	Flange Selection								Weight (kg)	Built in Motor	Weight (kg)	Remarks
		KK30	KK40	KK50	KK60	KK80	KK86	KK100	KK130				
ST40	FRST011024	-	F3	F3	F5	-	-	-	-	0.3	STD-24A	0.09	single axis
ST55	FRST021024	-	F3	F3	F5	-	-	-	-	0.55			single axis
	FRST022024	-				-	-	-	-	0.8			
	FRST023024	-				-	-	-	-	1.18			
	FRST121024	-	F3	F3	F5	-	-	-	-	0.58			axis of symmetry
	FRST122024	-				-	-	-	-	0.83			
	FRST123024	-				-	-	-	-	0.21			

Oriental Step Motor

Series	Model	Flange Selection								Built in Motor	Weight (kg)	Built in Driver	Weight (kg)
		KK30	KK40	KK50	KK60	KK80	KK86	KK100	KK130				
CSK 2 phase	CSK243-AP	-	F3	F3	F5	-	-	-	-	PK243-01A	0.21	CSD2109-P	0.12
	CSK244-AP	-	F3	F3	F5	-	-	-	-	PK244-01A	0.27	CSD2112-P	0.12
	CSK245-AP	-	F3	F3	F5	-	-	-	-	PK245-01A	0.35	CSD2112-P	0.12
	CSK264-AP	-	-	-	F4	F6	F6	-	-	PK264-02A	0.45	CSD2120-P	0.12
	CSK266-AP	-	-	-	F4	F6	F6	-	-	PK266-02A	0.7	CSD2120-P	0.12
	CSK268-AP	-	-	-	F4	F6	F6	-	-	PK268-02A	1	CSD2120-P	0.12
	CSK296-AP	-	-	-	-	-	-	F4	F3	PK296-03A	1.7	CSD2145P	0.2
	CSK299-AP	-	-	-	-	-	-	F4	F3	PK299-03A	2.8	CSD2145P	0.2
	CSK2913-AP	-	-	-	-	-	-	F4	F3	PK2913-02A	3.8	CSD2140P	0.2
CSK 5 phase	CSK523-AP	F3	-	-	-	-	-	-	-	PK523A	0.1	SD5103P3	0.04
CFKII 5 phase micro stepping	CFK543AP2	-	F3	F3	F5	-	-	-	-	PK543NAW	0.21	DFC5107P	0.2
	CFK544AP2	-	F3	F3	F5	-	-	-	-	PK544NAW	0.27	DFC5107P	0.2
	CFK545AP2	-	F3	F3	F5	-	-	-	-	PK545NAW	0.35	DFC5107P	0.2
	CFK564AP2	-	-	-	-	F5	F5	-	-	PK564NAW	0.6	DFC5114P	0.2
	CFK566AP2	-	-	-	-	F5	F5	-	-	PK566NAW	0.8	DFC5114P	0.2
	CFK569AP2	-	-	-	-	F5	F5	-	-	PK569NAW	1.3	DFC5114P	0.2
	CFK566HAP2	-	-	-	-	F5	F5	-	-	PK566HNAW	0.8	DFC5128P	0.22
	CKF569HAP2	-	-	-	-	F5	F5	-	-	PK569HNAW	1.3	DFC5128P	0.22
	CFK596HAP2	-	-	-	-	-	-	F3	-	PK596HNAW	1.7	DFC5128P	0.22
	CFK599HAP2	-	-	-	-	-	-	F3	-	PK599HNAW	2.8	DFC5128P	0.22
	CFK5913HAP2	-	-	-	-	-	-	F3	-	PK5913HNAW	3.8	DFC5128P	0.22
UMK 2 phase	UMK243A	-	F3	F3	F5	-	-	-	-	PK243-01	0.21	UDK2109	0.47
	UMK244A	-	F3	F3	F5	-	-	-	-	PK244-01	0.27	UDK2112	0.47
	UMK245A	-	F3	F3	F5	-	-	-	-	PK245-01	0.35	UDK2112	0.47
	UMK264A	-	-	-	F4	F6	F6	-	-	PK264-02	0.45	UDK2120	0.47
	UMK266A	-	-	-	F4	F6	F6	-	-	PK266-02	0.7	UDK2120	0.47
	UMK268A	-	-	-	F4	F6	F6	-	-	PK268-02	1	UDK2120	0.47
RK 5 phase	RK543AA	-	F3	F3	F5	-	-	-	-	PK543W	0.25	RKD507-A	0.4
	RK544AA	-	F3	F3	F5	-	-	-	-	PK544W	0.3	RKD507-A	0.4
	RK545AA	-	F3	F3	F5	-	-	-	-	PK545W	0.4	RKD507-A	0.4
	RK566AA	-	-	-	-	F5	F5	-	-	PK566W	0.8	RKD514L-A	0.85
	RK569AA	-	-	-	-	F5	F5	-	-	PK569W	1.3	RKD514L-A	0.85
	RK596AA	-	-	-	-	-	-	F3	-	PK596W	1.7	RKD514H-A	0.85
	RK599AA	-	-	-	-	-	-	F3	-	PK599W	2.8	RKD514H-A	0.85
	RK5913AA	-	-	-	-	-	-	F3	-	PK5913W	3.8	RKD514H-A	0.85
ASC α-step	ASC34AK	F3	-	-	-	-	-	-	-	ASM34AK	0.15	ASD10A-K	0.25

1.10.2 Motor Housing and Motor Adaptor Flange

KK30

Motor Housing F0

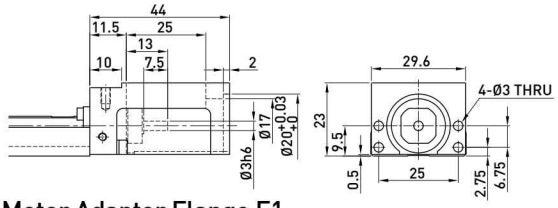

Motor Adaptor Flange F1

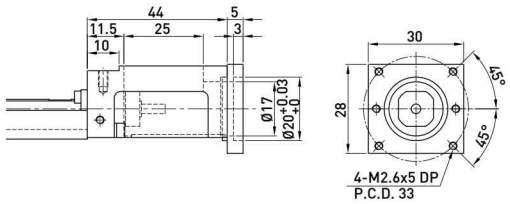

Motor Adaptor Flange F3

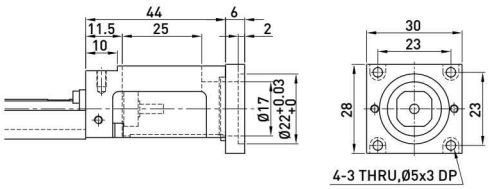

Motor Adaptor Flange F2

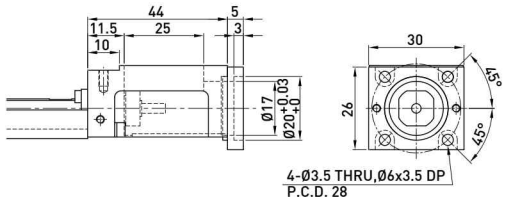

KK40

Motor Housing F0

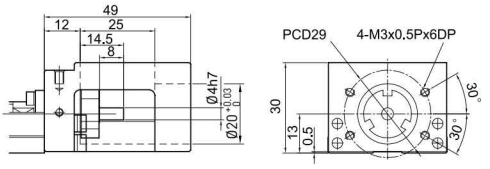

Motor Adaptor Flange F1

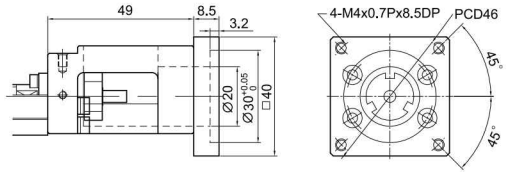

Motor Adaptor Flange F3

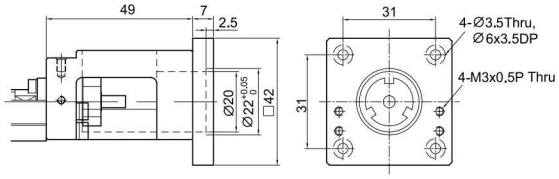

Motor Adaptor Flange F2

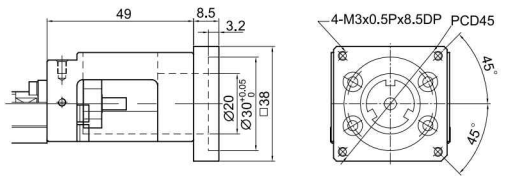

Mount Housing H0

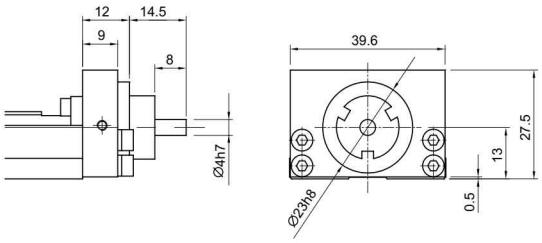

KK50

Motor Housing F0

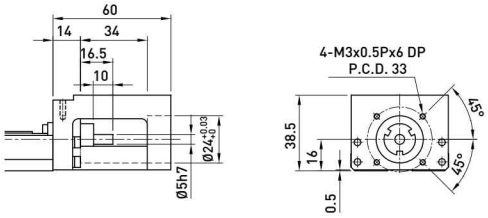

Motor Adaptor Flange F1

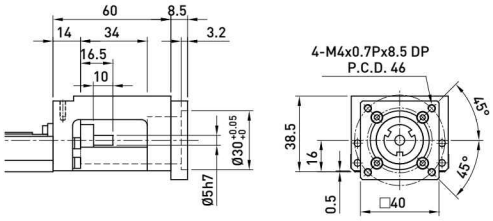

Motor Adaptor Flange F2

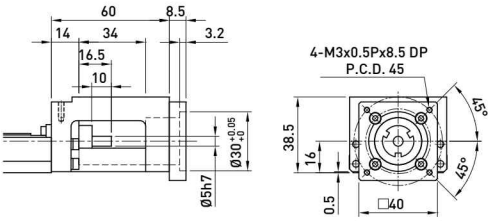

Motor Adaptor Flange F3

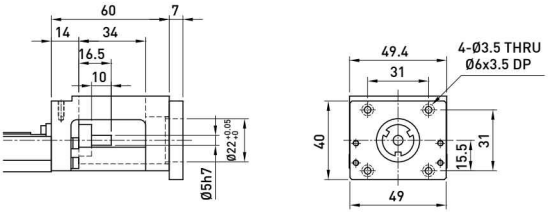

Mount Housing H0

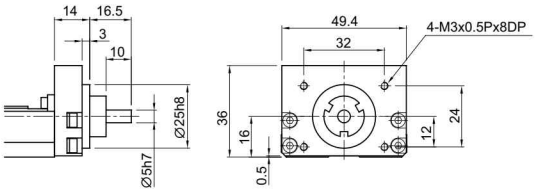

KK60

Motor Housing F0

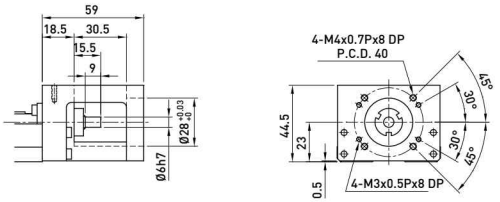

Motor Adaptor Flange F1

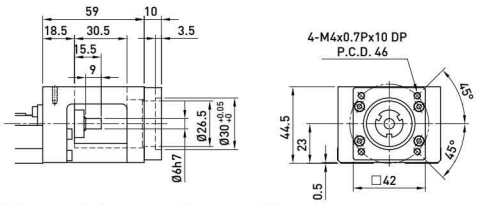

Motor Adaptor Flange F2

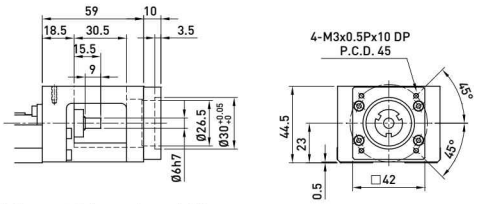

Mount Housing H0

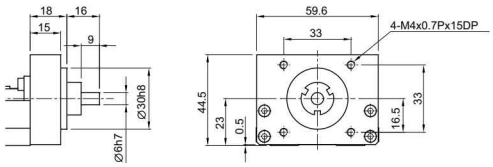

Motor Adaptor Flange F3

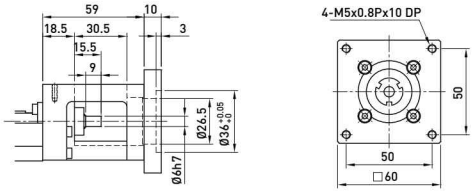

Motor Adaptor Flange F4

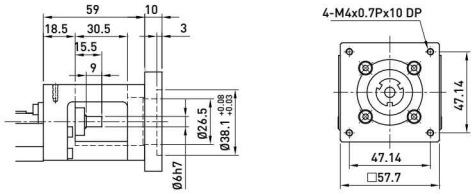

Motor Adaptor Flange F5

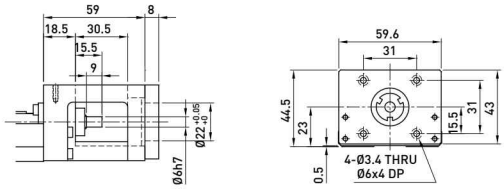

Mount Housing H1

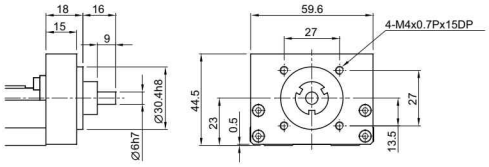

KK80

Motor Housing F0

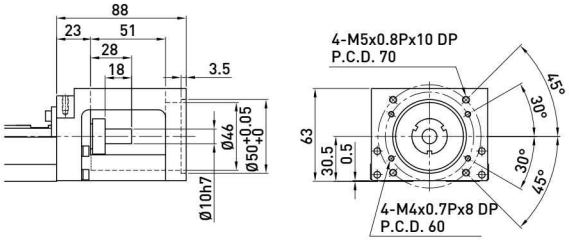

Motor Adaptor Flange F1

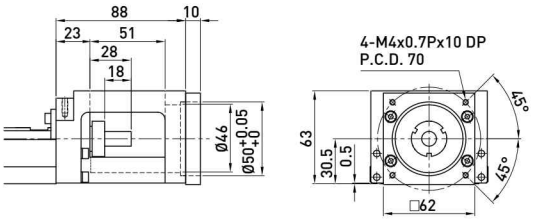

Motor Adaptor Flange F4

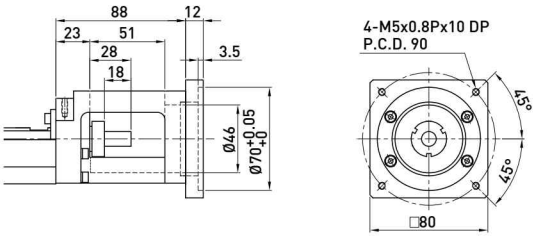

Motor Adaptor Flange F2

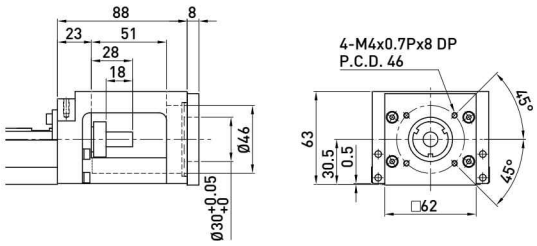

Motor Adaptor Flange F5

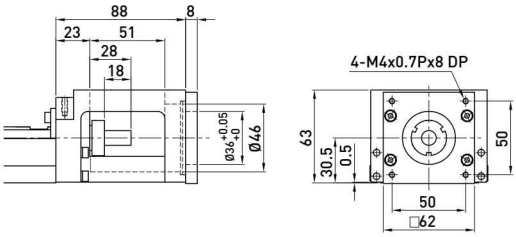

Motor Adaptor Flange F3

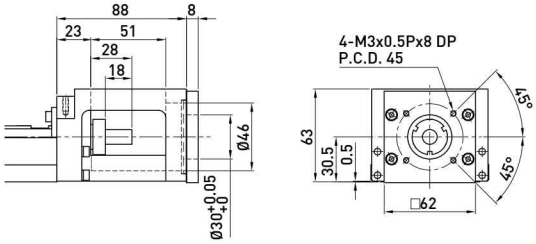

Motor Adaptor Flange F6

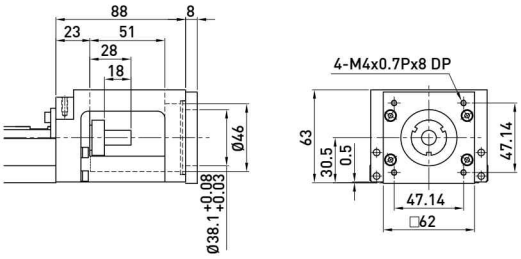

Mount Housing H0

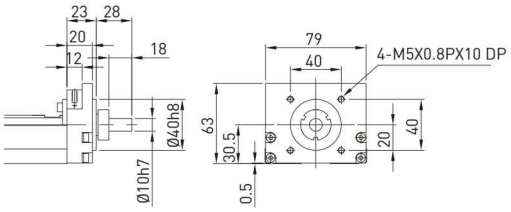

KK86

Motor Housing F0

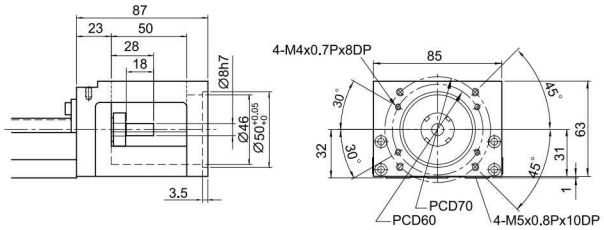

Motor Adaptor Flange F4

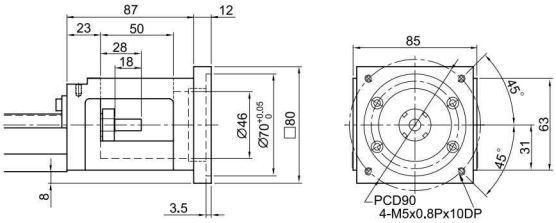

Motor Adaptor Flange F1

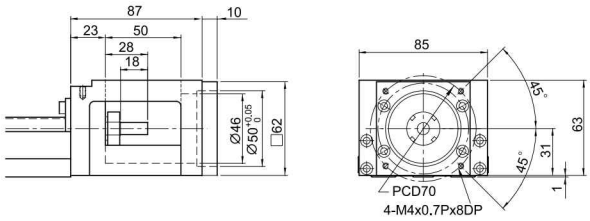

Motor Adaptor Flange F5

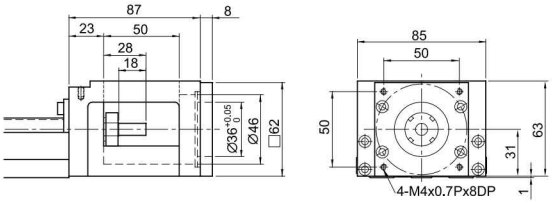

Motor Adaptor Flange F2

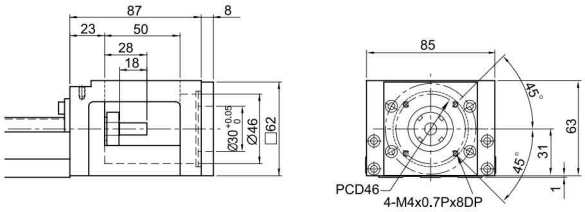

Motor Adaptor Flange F6

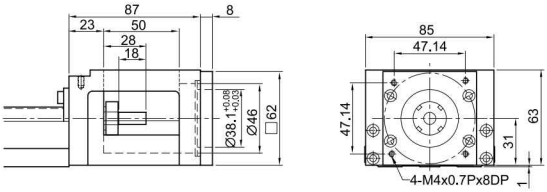

Motor Adaptor Flange F3

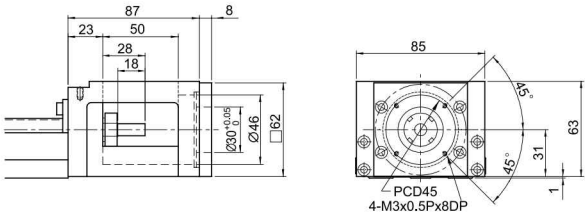

Mount Housing H0

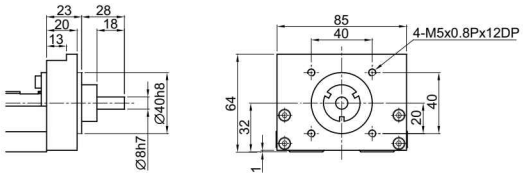

KK100

Motor Housing F0

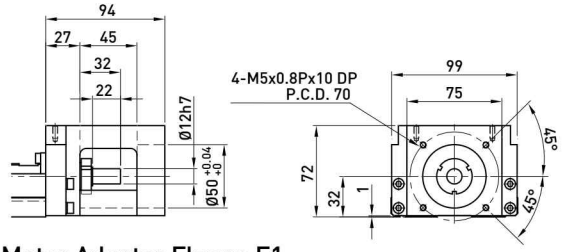

Motor Adaptor Flange F3

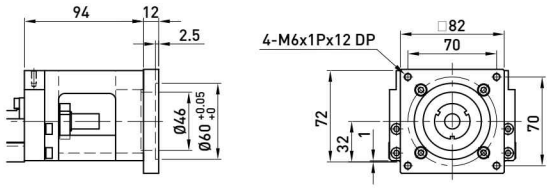

Motor Adaptor Flange F1

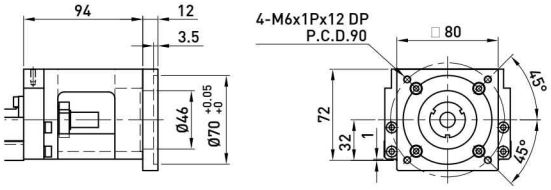

Motor Adaptor Flange F4

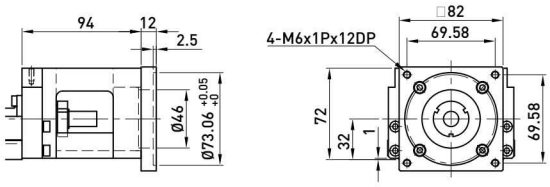

MotorAdaptor Flange F2

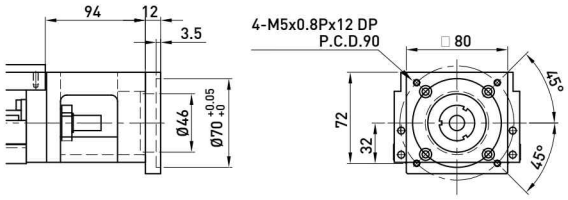

Mount Housing H0

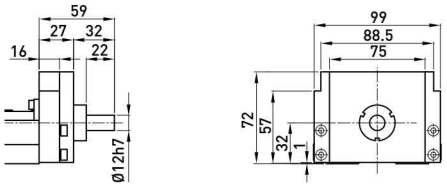

KK130

Motor Housing F0

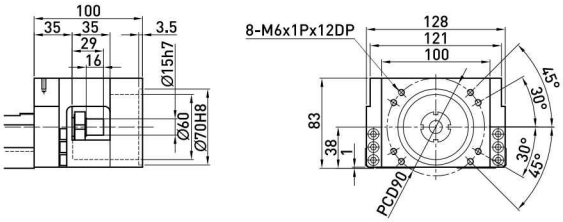

Motor Adaptor Flange F3

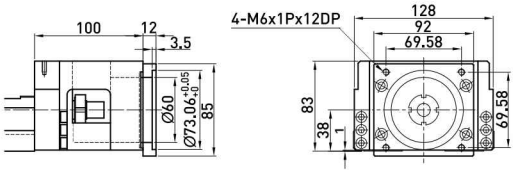

Motor Adaptor Flange F1

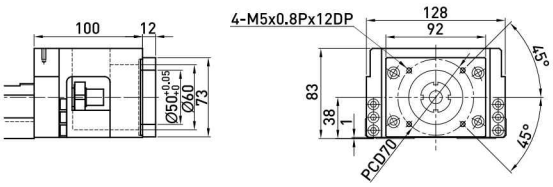

Motor Adaptor Flange F4

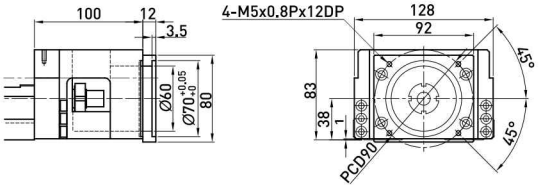

Motor Adaptor Flange F2

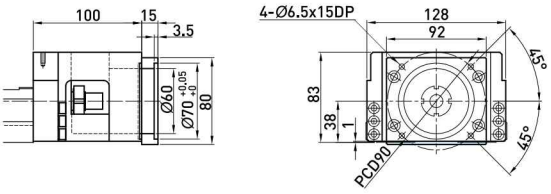

Mount Housing H0

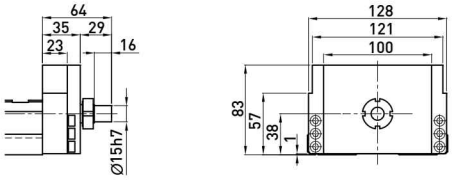

1.11 Optional Accessories

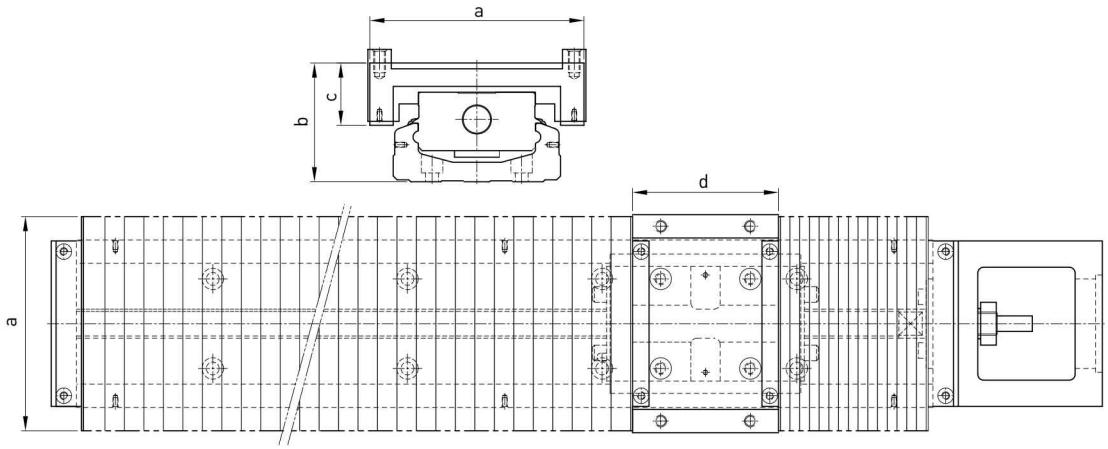

Unit : mm

Nominal Width	Rail Length	Stroke	Min.	Max.	a	b	c	d
KK30	75	22	15	37	47	22.5	15.5	23
	100	37	20	57				
	125	52	25	77				
	150	67	30	97				
	175	82	35	117				
	200	97	40	137				
KK40	100	35	16	51	60	29.5	19	33
	150	63	27	90				
	200	93	37	130				
KK50	150	60	21.5	81.5	62	37	19	47
	200	95	29	124				
	250	130	36.5	166.5				
	300	160	46.5	206.5				
KK60	150	56	16	80	84	45.5	24	54
	200	106	20	126				
	300	166	40	206				
	400	234	56	290				
	500	306	70	376				
	600	366	90	456				
KK80	340	181	42	223	106	62.5	34.5	75
	440	257	54	311				
	540	333	66	399				
	640	409	78	487				
	740	485	90	575				
	940	649	108	757				
KK86	340	188	36	224	110	61	32	75
	440	260	50	310				
	540	336	62	398				
	640	408	76	484				
	740	480	90	570				
	940	640	110	750				
KK100	980	769	58	827	150	73	41	95
	1080	855	65	920				
	1180	945	70	1015				
	1280	1029	78	1107				
	1380	1115	85	1200				
KK130	980	748	62	810	180	89	53	108
	1180	916	78	994				
	1380	1084	94	1178				
	1680	1346	113	1459				

1.12 Switch

Switch rail

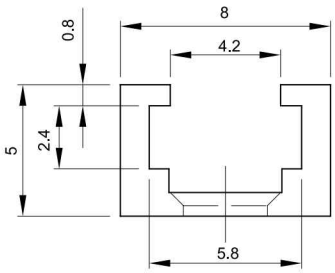

Switch

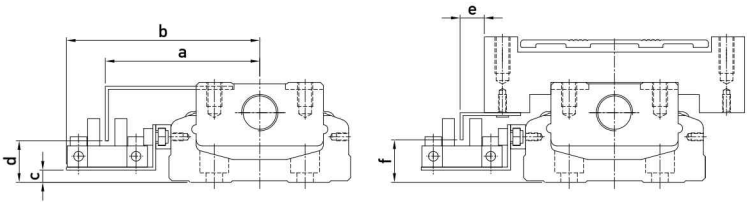

Nominal Width	a	b	c	d	e	f
KK40	41.5	54.1	0.5	10.8	15.3	12
KK50	45.5	59	1	10	15	11
KK60	51	63.8	4	14.5	8	13
KK80	61	74	8	19	9	19
KK86	63.5	76.7	8	18	8	18
KK100	71	84	10	20	9	20
KK130	85.5	98.5	14	24	0.5	23

Switch 1 : OMRON EE-SX-671

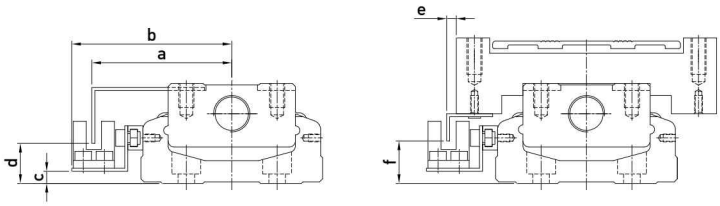

Nominal Width	a	b	c	d	e	f
KK40	36.5	44.3	1	9.8	10.5	12
KK50	41.3	48	1	10.5	10.2	11
KK60	46.2	52.8	4	14	3.2	13
KK80	56	63	8	18	4	18
KK86	59	65.7	8	18	3	18
KK100	66	73	10	20	4.2	20
KK130	80.8	87.5	14	23.5	-4.1	23.5

Switch 2 : OMRON EE-SX-674

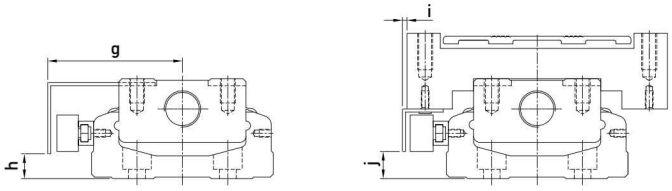

Nominal Width	g	h	i	j
KK40	40	5.5	13.5	5.5
KK50	39.5	5.7	7	19.5
KK60	44.5	9	2	9
KK80	54	12	2	13
KK86	57	13	1	13
KK100	64.5	15	2.5	15
KK130	79	19	-6	19

Switch 3 : PANASONIC GX-F12A

Switch 4 : PANASONIC GX-F12A-P

Nominal Width	g	h	i	j
KK30	28	1.8	5.8	1.8

Switch 5 : YAMATAKE APM-D3B1-03