Single Axis Robot

KA Series

3.1 Features

- Lightweight and high rigidity aluminum base
- Easy system installation and maintenance
- Complete selection of accessories for most applications
- Customized design

3.2 Applications

- Precision industry
- FPD industry
- Conveying equipment
- Inspection & testing equipment
- Assembly equipment

3. 3 Model Number of Single Axis Robot Series

KA 100 B 5 P E - 500 A E F0 E U S1 M

Stage Type:
KA,KS,KU,KE

Nominal Width

Drive type:
B: Timing Belt
D: Double Slider
None: Ballscrew

Lead

Precision Grade:
P: Precision
C: Normal

E: Ballscrew Special Order
None: Normal Type

Effective Stroke (mm)

Slider Type:
A: Standard

E: Slider Special Order
None: Normal Type

Motor Flange Type :
F0: Standard
F1~6: See reference P213-P217
FD: Bottom
FI: Internal
FL: Left
FR: Right

E: Flange Special Order
None: Normal Type

Cover:
U: Without cover
None: Standard Cover

Limit Switch:
S1: OMRON SX671
S2: OMRON SX674
S3: SUNX GX-F12A
S4: SUNX GX-F12A-P
None: Without Sensor

Motor:
M:Supplied With Motor
None:Without Motor

3.4 Specifications

The KA series designation is represented by the following:

(1)	(2)	(3)	(4)	(5)	(6)	(7)	(8)	(9)
Model	Lead	Precision Grade	Effective Stroke	Slider Type	Motor Flange	Aluminum Cover	Limit Switch	Motor

(1) Model

KA is the designation for all KA models and the number represents the width of the aluminum base.

(2) Lead

The lead on the ballscrew, in millimeters, indicates how far a sliding table will travel with a complete rotation of the ballscrew. The following table shows the current available ballscrews for the KA series：

KA Model	KA136															
	KA100						KA170								KA200	
Ballscrew diameter (Φ)	15			16			20				25		32		25	
Lead (P)	10	20	40	5	10	32	5	10	20	40	25	50	32	40	10	25
L (available in left hand thread)			*	L	L	*	L		L	*	*	*	*	*	*	*
*Please contact HIWIN for high lead screws, left-hand thread screws, or any unlisted ballscrew.																

(3) Precision Grade

The precision grade for the sliding table to repeat the same position after traveling back and forth.
C; Normal grade : ±0.02mm, P; Precision grade : ±0.01mm.
The repeatability is measured by the largest error occurred at any point when the sliding table is traveling back and forth.
＊Attention : KA products do not indicate the absolute positional accuracy.

(4) Effective Stroke

The travel range for the KA sliding table (in millimeters).
＊Attention : Vibration might occur when the effective stroke is longer than what is listed in the catalog. If vibration occurs, reduce the RPM to help improve the situation. Refer to the "Speed" section for information regarding RPM values.

(5) Slider Type

The KA series is designed to only support the listed loading. Please contact HIWIN for inquiries on greater dynamic load or heavy load models.

(6) Motor Flange

Direct connection is the standard type on the KA series. There are different flange options for adapting different types of motors, please refer to the following table.

	KA100		KA136		KA170		KA200	
	Screw	PCD	Screw	PCD	Screw	PCD	Screw	PCD
F0	M3	40	M4	60	M5	70	M6	90
	M4	46	M5	70				
F1	M3	45	M4	70	M6	90	M5	70
F2			M4	46	M5	90	M5	90
F3			M3	45	M6	□70		
F4			M5	90	M6	□69.58		
F5			M4	□50				
F6			M4	□47.14				

FD : Bottom connected motor (belt pulley drive).
FI : Internal connected motor (coupling drive).
FL : Left connected motor (belt pulley drive).
FR : Right connected motor (belt pulley drive).
Please refer to the Appendix for different flange sizes.

(7) Aluminum Cover

All standard KA models are equipped with an aluminum protective cover. U : without aluminum cover.

(8) Limit Switch

HIWIN provides some standard options for limit switches. Please contact a HIWIN sales representative for any other type that is not listed.

(9) Motor

No mark : motor not included. Please inform HIWIN in advance when installing a motor provided by the customer.
M : motor included. Please refer to the Appendix for motor selection, for other customized motors please contact a HIWIN sales representative.

3.5 KA Specifications

Series	Drive Type	Aluminum Base Width	Motor Choice	Maximum Load (Kg)*1														Motor Connection Type	Model
				Lead (mm)															
				1	2	4	5	10	20	25	1	2	4	5	10	20	25		
				Horizontal							Vertical								
KA	Ballscrew	90	100W				24	12						6	3			F0, F1	KA90-
		100					50	32	20					12	8	3		F0, F1, FD, FI, FL, FR	KA100-
		120					50	32	20					12	8	3		F0, F1	KA120-
		136	200W				95	75	40					27	18	7		F0~F6, FD, FI, F, FR	KA136-
		150						80	40						20	8		F0~F6	KA150-
		170	400W					125	75						30	14		F0~F4, FD, FI, FL, FR	KA170-
		200	750W					150		85					40		20	F0~F2, FD, FI, FL, FR	KA200
	Belt*2	100	100W				7.5											FL, FR	KA100B-
		136	200W				15											FL, FR	KA136B-
		170	400W				30											FL, FR	KA170B-
KS	Ballscrew	90	100W				24	12						6	3			FI, F1	KS90-
		100					8	6	3.5					2	1.5	1		F1, FI, FL, FR	KS100-
		120					50	32	20					12	8	3		FI, F1	KS120-
		140	200W					75	35						18	7		FI, FL, FR	KS140
		150						80	40						20	8		FI	KS150-
		180	400W					110	50						30	14		FI, FL, FR	KS180-
	Belt*2	100	100W				3											FL, FR	KS100B-
		140	200W				15											FL, FR	KS140B-
		180	400W				30											FL, FR	KS180B-
KU	Ballscrew	60	100W				30	20						7	5			F0, F1	KU60-
		80	200W				60	40	20					15	10	5		F0~F6	KU80-
KE		30	28 stepping drive	3							1							F0	KE30-
		40	50W		6		4					1.5		1				F0~F2	KE40-
		50	100W			8							2					F0, F1	KE50-
		65					15	8						4	2			F0, F1	KE65-
		70					20	15						5	4			F0, F1	KE70-
		90	200W				25	23						6	5			F0~F6	KE90-

*1.Maximum mass refers to the maximum load value the stage could sustain. Load center is just above the sliding table.
2.The belt driven KA is to be used in horizontal applications. Maximum linear velocity of 1800 mm/sec.

3.6 U-shaped aluminum base features a light weight construction and high rigidity

Series	Moment of Inertia (mm^4)	Ixx	Iyy	
KA	KA100	2.17×10^5	1.81×10^6	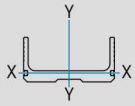
	KA136	3.37×10^5	5.36×10^6	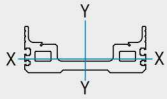
	KA170	8.84×10^5	1.24×10^7	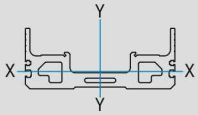
	KA200	9.52×10^5	1.90×10^7	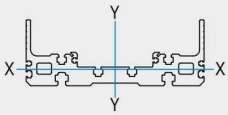
KS	KS10	8.67×10^4	1.45×10^6	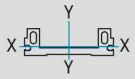
	KS14	2.34×10^5	4.4×10^6	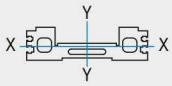
	KS18	3.7×10^5	1.2×10^7	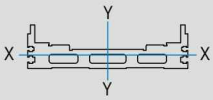
KU	KU60	5.24×10^5	5.48×10^5	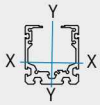
	KU80	1.56×10^5	1.67×10^6	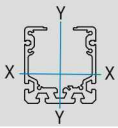

3.7 Table for the operating speed and stroke of KA

	KA Model				KA136							
					KA100				KA170		KA200	
	Ballscrew D (mm)				15		16		20		25	
	Ballscrew dr (mm)				12.364	12.399	12.899	12.684	16.624	17.084	21.824	22.094
Lead(mm)	5	10	20	25	10	20	5	10	10	20	10	25
RPM: S(rpm)	Maximum Linear Velocity V: (mm/sec)				Maximum Stroke							
100	8	17	33	42	4142	4148	4234	4197	4723	4792	5449	5484
200	17	33	67	83	2883	2887	2948	2922	3264	3312	3776	3801
300	25	50	100	125	2325	2329	2378	2357	2617	2657	3035	3056
400	33	67	133	167	1993	1996	2039	2020	2232	2266	2594	2611
500	42	83	167	208	1766	1769	1807	1791	1969	1999	2292	2308
600	50	100	200	250	1598	1601	1636	1621	1774	1802	2070	2084
700	58	117	233	292	1468	1471	1503	1489	1623	1649	1897	1910
800	67	133	267	333	1363	1366	1396	1383	1502	1526	1758	1770
900	75	150	300	375	1277	1279	1307	1295	1401	1424	1642	1654
1000	83	167	333	417	1203	1205	1232	1220	1316	1337	1545	1556
1100	92	183	367	458	1140	1142	1167	1156	1242	1263	1461	1471
1150	96	192	383	479	1111	1113	1138	1128	1209	1230	1423	1433
1200	100	200	400	500	1085	1086	1111	1101	1179	1198	1387	1397
1300	108	217	433	542	1036	1038	1061	1051	1122	1141	1323	1332
1400	117	233	467	583	993	994	1017	1007	1072	1090	1265	1274
1500	125	250	500	625	954	955	977	968	1027	1044	1213	1222
1600	133	267	533	667	918	920	941	932	986	1003	1166	1175
1700	142	283	567	708	886	888	909	900	949	965	1124	1132
1800	150	300	600	750	857	858	879	870	915	931	1085	1093
1900	158	317	633	792	830	831	851	843	883	899	1049	1057
2000	167	333	667	833	805	806	826	817	854	870	1016	1024
2100	175	350	700	875	782	783	802	794	827	842	985	993
2200	183	367	733	917	760	762	780	772	802	817	956	964
2300	192	383	767	958	740	741	759	752	779	793	930	937
2400	200	400	800	1000	721	722	740	733	757	771	904	912
2500	208	417	833	1042	704	705	722	715	737	750	881	888
2600	217	433	867	1083	687	688	705	698	717	731	859	866
2700	225	450	900	1125	671	672	689	682	699	712	838	845
2800	233	467	933	1167	656	657	674	667	682	695	818	825
2900	242	483	967	1208	642	643	659	652	665	678	799	806
3000	250	500	1000	1250	629	630	645	639	650	662	781	788

* Operating Speed and Stroke for reference only. If effective stroke requirement is longer than standard stroke available in the above chart, please contact HIWIN.

3.8 Dynamic Load

Several factors affect the calculation of loads acting on a KA system as shown in the figure below. The dynamic loads indicated in the catalog（Fy, Fz, Mx, My, Mz）are calculated based on 10,000 km of travel distance. To obtain the correct load value and maintain the service life of the KA, each load condition should be carefully considered.

The below figure shows the load being applied onto the center of the KA sliding table. In fact, the load is not necessarily in the middle during it's operation, and if the load is not on the center, there could be potential vibrations, over torque ,or slow reaction.

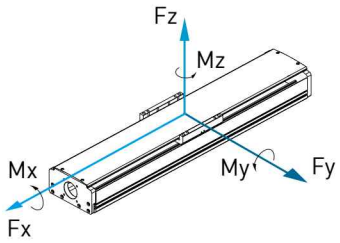

pic.1

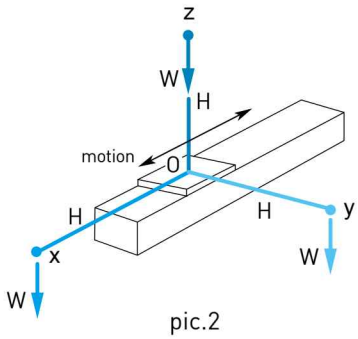

pic.2

To avoid these circumstances, please keep the loading (W) close to the center of the sliding table(O) within the distance(H).

	H (mm)		
Off Center Distance	x	y	z
KA100	550	550	550
KA136	550	550	550
KA170	780	780	780
KA200	900	900	900

3.9 Installation Method

There are several installation methods for the KA series as shown in the following figures.

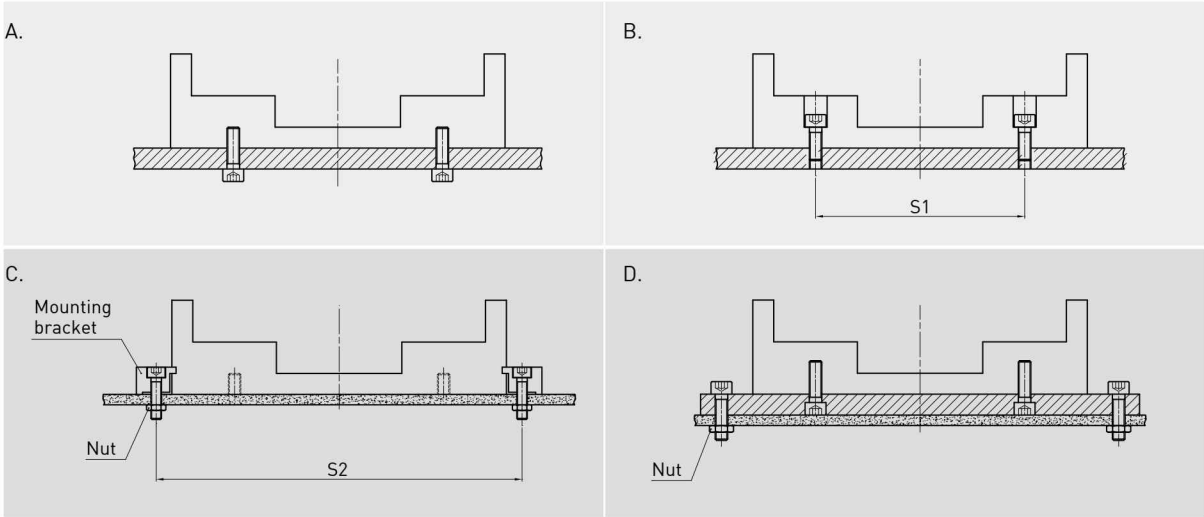

The table below indicates the distance between fixing screws, (S1) on type B and (S2) on type C (fixing from above):

KA Model	S1	S2	Screw
KA100	80	116	M5
KA136	112	150	M6
KA170	136	186	M8
KA200	162	218	M8

3.8 KA Series

Model Number for KA090

KA090	-10	P	-0600	A	F0	U	S1	M
Model	Lead	Precision Grade	Effective Stroke	Slider Type	Motor Flange	Cover	Limit Switch	Motor
	5 mm 10 mm	C: Normal P: Precision		A: Standard	F0:Direct	U: Without Cover None : Standard Cover	S1: OMRON SX671 S2: OMRON SX674 S3: SUNX GX-F12A S4: SUNX GX-F12A-P None: No Limit Switch	M: Supplied With Motor None: Without Motor

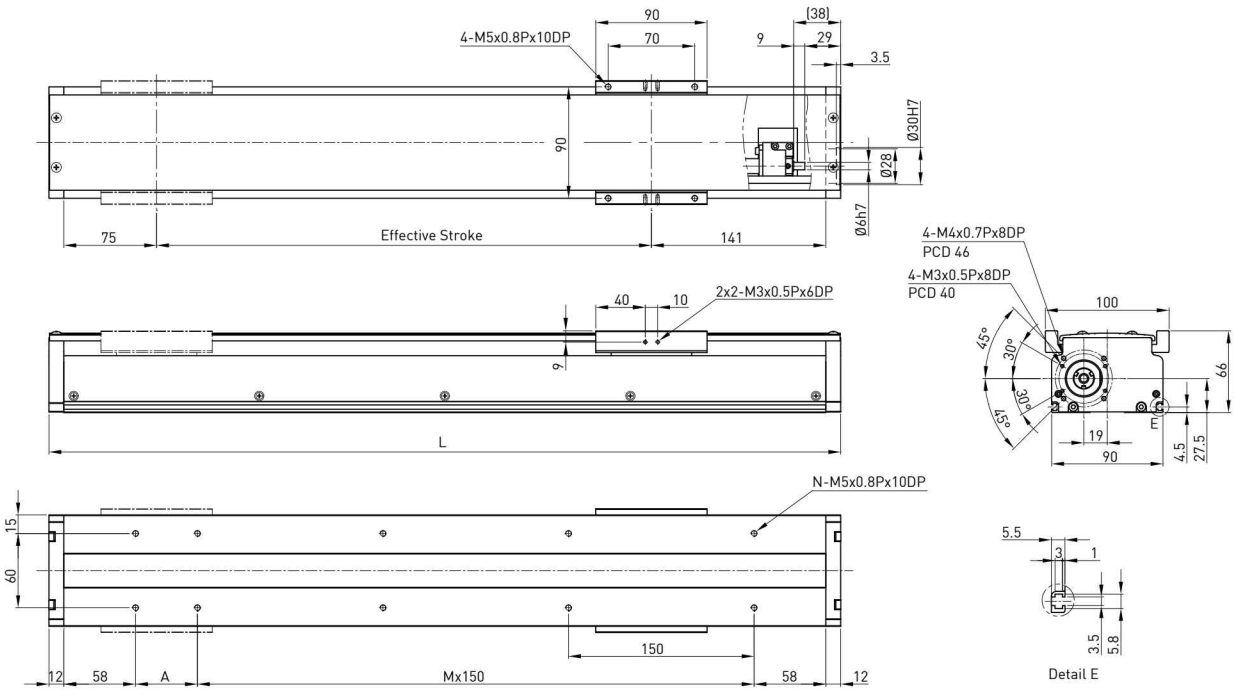

Effective stroke (mm)	L	A	M	N	Weight (kg)
50	290	150	0	4	3.38
100	340	50	1	6	3.78
150	390	100	1	6	4.18
200	440	150	1	6	4.58
250	490	50	2	8	4.98
300	540	100	2	8	5.38
350	590	150	2	8	5.78
400	640	50	3	10	6.18
450	690	100	3	10	6.58
500	740	150	3	10	6.98
550	790	50	4	12	7.38
600	840	100	4	12	7.78

AC motor output		W	100	
Drive			Ballscrew C7(normal)	
Lead		mm	5	10
Rated RPM		RPM	3000	3000
Max linear speed*		mm/sec	250	500
Rated thrust		N	280	140
Repeatability		mm	±0.02	
Effective stroke		mm	150~600	
Max load (H)		kg	24	12
Rated dynamic load**	Fyd	N	50	50
	Fzd	N	240	160
	Mxd	N-m	5	4.5
	Myd	N-m	2.3	2.1
	Mzd	N-m	2.3	2.1
Permitted load condition***	$\frac{Fy}{Fyd}+\frac{Fz}{Fzd}+\frac{Mx}{Mxd}+\frac{My}{Myd}+\frac{Mz}{Mzd}\leq 1$ Fy, Fz, Mx, My, Mz are working loads			

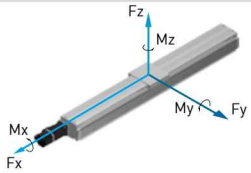

* Vibration might occur when the effective stroke is longer than 550mm.
The maximum speed should be decreased by 15% for every 100mm of increased stroke.
** The load condition is based on 10,000km operation.
*** If used on the vertical axis or in a special condition, please contact HIWIN.

Model Number for KA100

KA100	-20	P	-1050	A	F0	U	S1	M
Model	Lead	Precision Grade	Effective Stroke	Slider Type	Motor Flange	Cover	Limit Switch	Motor
	5 mm 10 mm 20 mm	C: Normal P: Precision		A: Standard	F0:Direct	U: Without Cover None : Standard Cover	S1: OMRON SX671 S2: OMRON SX674 S3: SUNX GX-F12A S4: SUNX GX-F12A-P None: No Limit Switch	M: Supplied With Motor None: Without Motor

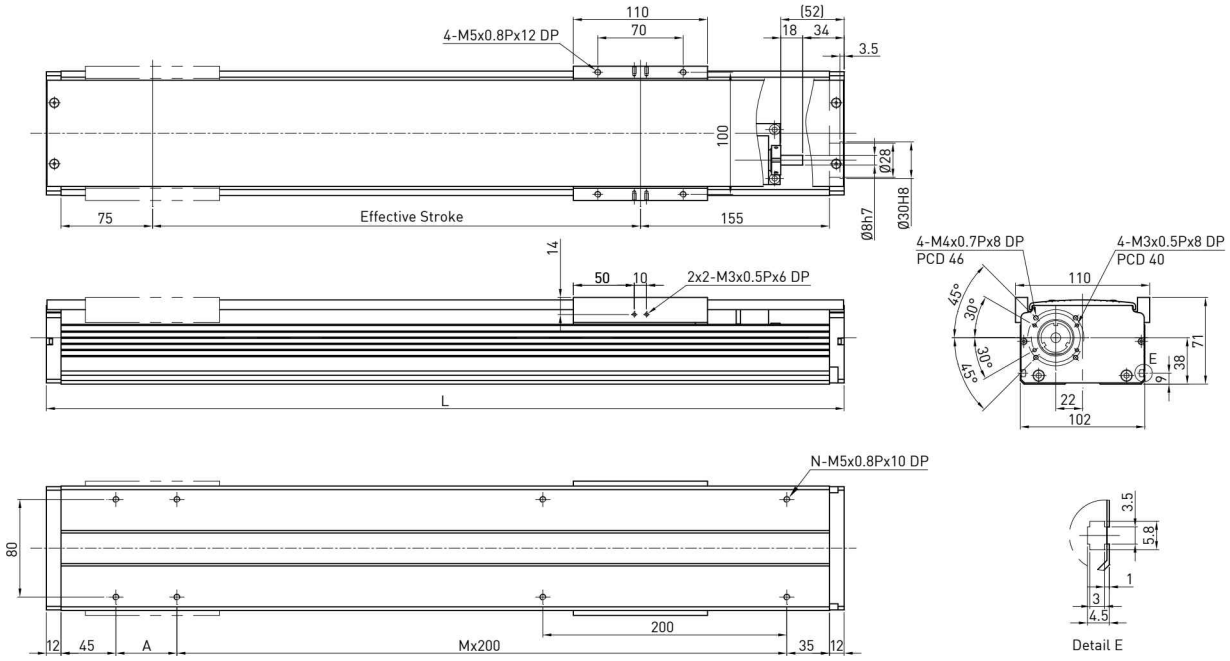

Effective stroke (mm)	L	A	M	N	Weight (kg)
100	354	50	1	6	4.86
150	404	100	1	6	5.34
200	454	150	1	6	5.81
250	504	200	1	6	6.29
300	554	50	2	8	6.77
350	604	100	2	8	7.25
400	654	150	2	8	7.73
450	704	200	2	8	8.2
500	754	50	3	10	8.67
550	804	100	3	10	9.15
600	854	150	3	10	9.63
650	904	200	3	10	10.11
700	954	50	4	12	10.59
750	1004	100	4	12	11.06
800	1054	150	4	12	11.54
850	1104	200	4	12	12.02
900	1154	50	5	14	12.49
950	1204	100	5	14	12.97
1000	1254	150	5	14	13.45
1050	1304	200	5	14	13.93

AC motor output		W	100		
Drive			Ballscrew C7(normal)		
Lead		mm	5	10	20
Rated RPM		RPM	3000	3000	3000
Max linear speed*		mm/sec	250	500	1000
Rated thrust		N	280	140	70
Repeatability		mm	±0.02		
Effective stroke		mm	100~1050		
Max load (H)		kg	50	32	20
Rated dynamic load**	Fyd	N	50	50	50
	Fzd	N	500	320	200
	Mxd	N-m	16	16	16
	Myd	N-m	14	13.5	13
	Mzd	N-m	14	13.5	13

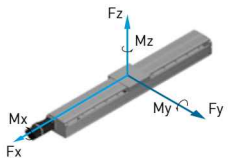

Permitted load condition* :

$$\frac{Fy}{Fyd}+\frac{Fz}{Fzd}+\frac{Mx}{Mxd}+\frac{My}{Myd}+\frac{Mz}{Mzd}\leq 1$$

Fy, Fz, Mx, My, Mz are working loads

* Vibration might occur when the effective stroke is longer than 650mm.
The maximum speed should be decreased by 15% for every 100mm of increased stroke.
** The load condition is based on 10,000km operation.
*** If used on the vertical axis or in a special condition, please contact HIWIN.

Model Number for KA100-FD

KA100	-20	P	-1050	A	FD	U	S1	M
Model	Lead	Precision Grade	Effective Stroke	Slider Type	Motor Flange	Cover	Limit Switch	Motor
	5 mm 10 mm 20 mm	C: Normal P: Precision		A: Standard	FD: Bottom	U: Without Cover None : Standard Cover	S1: OMRON SX671 S2: OMRON SX674 S3: SUNX GX-F12A S4: SUNX GX-F12A-P None: No Limit Switch	M: Supplied With Motor None: Without Motor

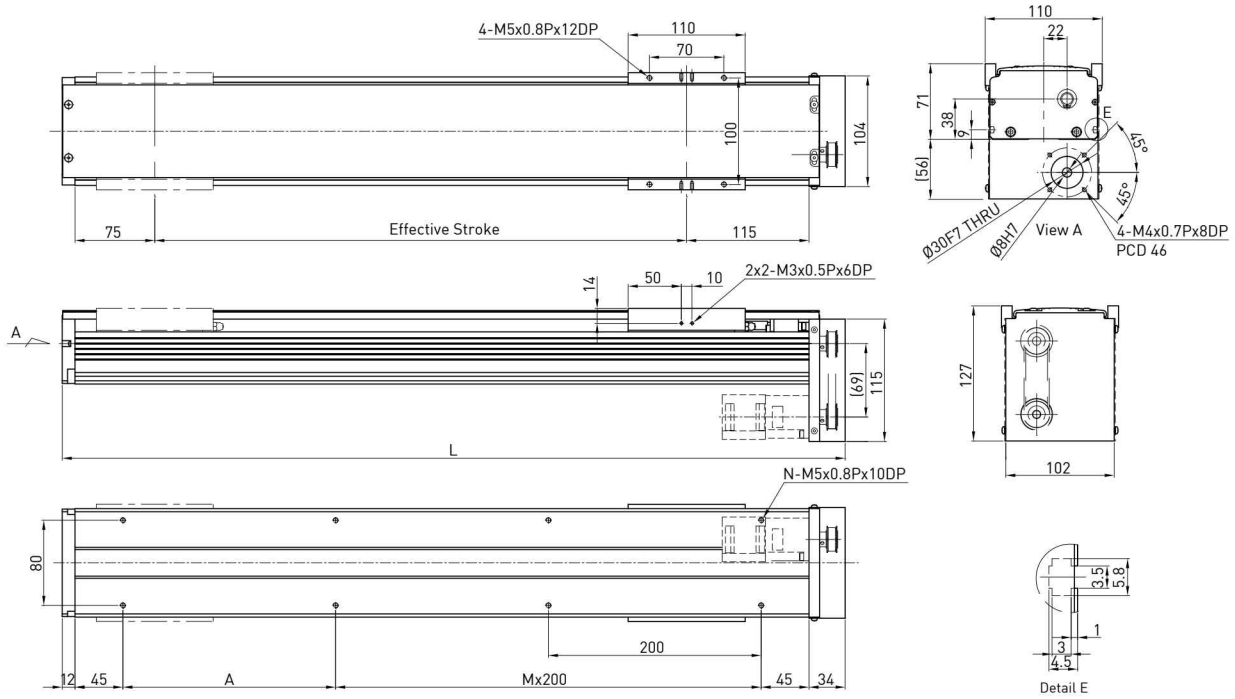

Effective stroke (mm)	L	A	M	N	Weight (kg)
100	336	200	0	4	4.91
150	386	50	1	6	5.41
200	436	100	1	6	5.88
250	486	150	1	6	6.36
300	536	200	1	6	6.85
350	586	50	2	8	7.33
400	636	100	2	8	7.82
450	686	150	2	8	8.29
500	736	200	2	8	8.76
550	786	50	3	10	9.25
600	836	100	3	10	9.73
650	886	150	3	10	10.22
700	936	200	3	10	10.71
750	986	50	4	12	11.19
800	1036	100	4	12	11.67
850	1086	150	4	12	12.15
900	1136	200	4	12	12.63
950	1186	50	5	14	13.12
1000	1236	100	5	14	13.6
1050	1286	150	5	14	14.08

AC motor output		W	100	
Drive			Ballscrew C7(normal)	
Lead		mm	5	10	20
Rated RPM		RPM	3000	3000	3000
Max linear speed*		mm/sec	250	500	1000
Rated thrust		N	280	140	70
Repeatability		mm	±0.02	
Effective stroke		mm	100~1050	
Max load (H)		kg	50	32	20
Rated dynamic load**	Fyd	N	50	50	50
	Fzd	N	500	320	200
	Mxd	N-m	16	16	16
	Myd	N-m	14	13.5	13
	Mzd	N-m	14	13.5	13

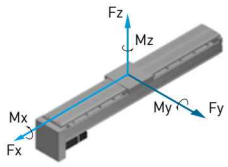

Permitted load condition***

$$\frac{Fy}{Fyd}+\frac{Fz}{Fzd}+\frac{Mx}{Mxd}+\frac{My}{Myd}+\frac{Mz}{Mzd}\leq 1$$

Fy, Fz, Mx, My, Mz are working loads

* Vibration might occur when the effective stroke is longer than 650mm.
The maximum speed should be decreased by 15% for every 100mm of increased stroke.
** The load condition is based on 10,000km operation.
*** If used on the vertical axis or in a special condition, please contact HIWIN.

Model Number for KA100-FI

KA100	-20	P	-1050	A	FI	U	S1	M
Model	Lead	Precision Grade	Effective Stroke	Slider Type	Motor Flange	Cover	Limit Switch	Motor
	5 mm 10 mm 20 mm	C: Normal P: Precision		A: Standard	FI : Internal	U: Without Cover None : Standard Cover	S1: OMRON SX671 S2: OMRON SX674 S3: SUNX GX-F12A S4: SUNX GX-F12A-P None: No Limit Switch	M: Supplied With Motor None: Without Motor

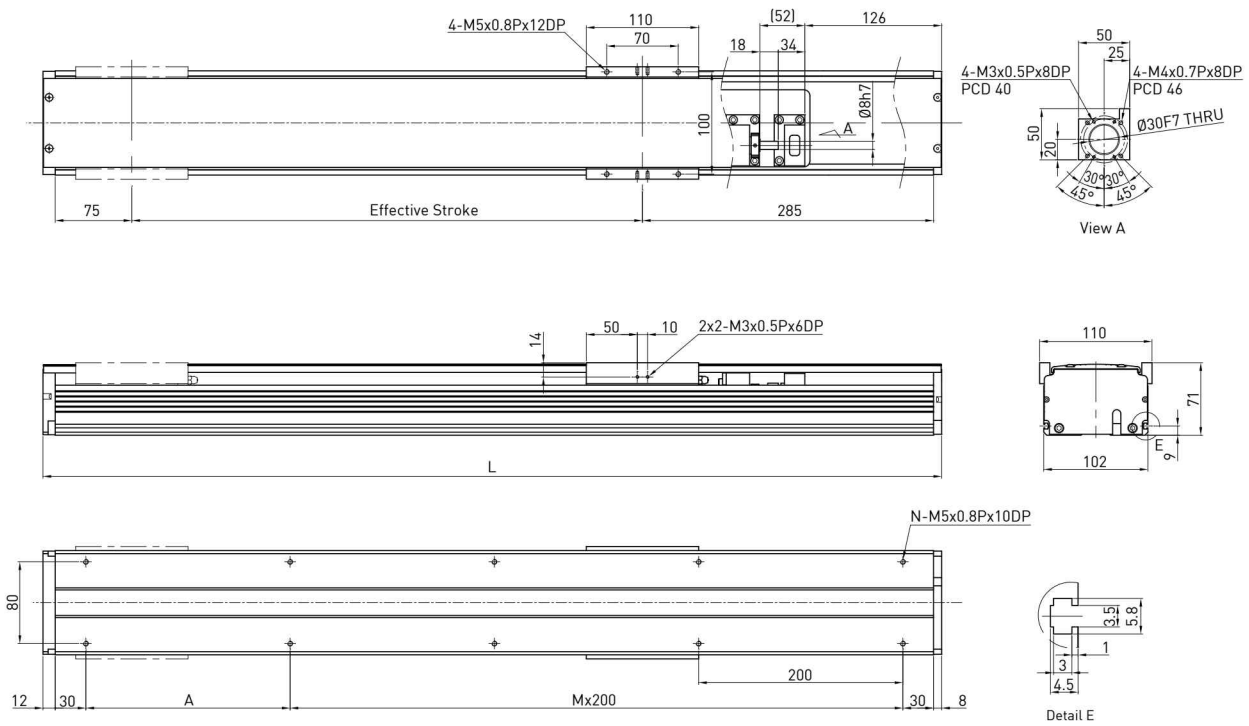

Effective stroke (mm)	L	A	M	N	Weight (kg)
100	480	200	1	6	5.2
150	530	50	2	8	5.71
200	580	100	2	8	6.22
250	630	150	2	8	6.73
300	680	200	2	8	7.24
350	730	50	3	10	7.76
400	780	100	3	10	8.27
450	830	150	3	10	8.77
500	880	200	3	10	9.28
550	930	50	4	12	9.79
600	980	100	4	12	10.31
650	1030	150	4	12	10.82
700	1080	200	4	12	11.33
750	1130	50	5	14	11.83
800	1180	100	5	14	12.35
850	1230	150	5	14	12.86
900	1280	200	5	14	13.37
950	1330	50	6	16	13.88
1000	1380	100	6	16	14.39
1050	1430	150	6	16	14.91

AC motor output		W	100	
Drive			Ballscrew C7(normal)	
Lead		mm	5	10	20
Rated RPM		RPM	3000	3000	3000
Max linear speed*		mm/sec	250	500	1000
Rated thrust		N	280	140	70
Repeatability		mm	±0.02	
Effective stroke		mm	100~1050	
Max load (H)		kg	50	32	20
Rated dynamic load**	Fyd	N	50	50	50
	Fzd	N	500	320	200
	Mxd	N-m	16	16	16
	Myd	N-m	14	13.5	13
	Mzd	N-m	14	13.5	13

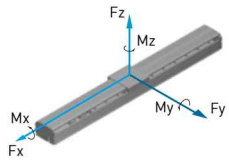

Permitted load condition* :

$$\frac{Fy}{Fyd}+\frac{Fz}{Fzd}+\frac{Mx}{Mxd}+\frac{My}{Myd}+\frac{Mz}{Mzd}\leq 1$$

Fy, Fz, Mx, My, Mz are working loads

* Vibration might occur when the effective stroke is longer than 650mm.
The maximum speed should be decreased by 15% for every 100mm of increased stroke.
** The load condition is based on 10,000km operation.
*** If used on the vertical axis or in a special condition, please contact HIWIN.

Model Number for KA100-FL

KA100	-20	P	-1050	A	FL	U	S1	M
Model	Lead	Precision Grade	Effective Stroke	Slider Type	Motor Flange	Cover	Limit Switch	Motor
	5 mm 10 mm 20 mm	C: Normal P: Precision		A: Standard	FL: Left	U: Without Cover None : Standard Cover	S1: OMRON SX671 S2: OMRON SX674 S3: SUNX GX-F12A S4: SUNX GX-F12A-P None: No Limit Switch	M: Supplied With Motor None: Without Motor

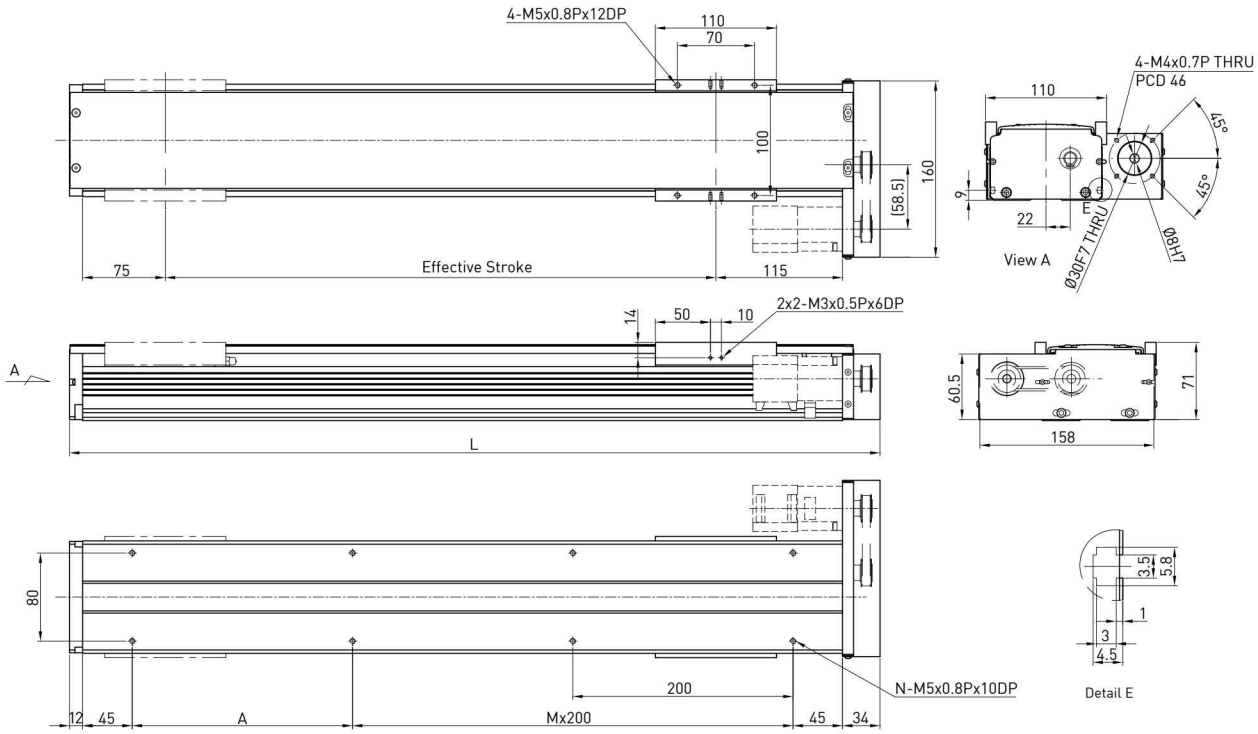

Effective stroke (mm)	L	A	M	N	Weight (kg)
100	336	200	0	4	4.91
150	386	50	1	6	5.41
200	436	100	1	6	5.88
250	486	150	1	6	6.36
300	536	200	1	6	6.85
350	586	50	2	8	7.33
400	636	100	2	8	7.82
450	686	150	2	8	8.29
500	736	200	2	8	8.76
550	786	50	3	10	9.25
600	836	100	3	10	9.73
650	886	150	3	10	10.22
700	936	200	3	10	10.71
750	986	50	4	12	11.19
800	1036	100	4	12	11.67
850	1086	150	4	12	12.15
900	1136	200	4	12	12.63
950	1186	50	5	14	13.12
1000	1236	100	5	14	13.6
1050	1286	150	5	14	14.08

AC motor output		W	100		
Drive			Ballscrew C7(normal)		
Lead		mm	5	10	20
Rated RPM		RPM	3000	3000	3000
Max linear speed*		mm/sec	250	500	1000
Rated thrust		N	280	140	70
Repeatability		mm	±0.02		
Effective stroke		mm	100~1050		
Max load (H)		kg	50	32	20
Rated dynamic load**	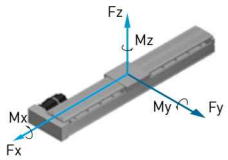	Fyd	N	50	50	50
		Fzd	N	500	320	200
		Mxd	N-m	16	16	16
		Myd	N-m	14	13.5	13
		Mzd	N-m	14	13.5	13
Permitted load condition***	$\frac{Fy}{Fyd}+\frac{Fz}{Fzd}+\frac{Mx}{Mxd}+\frac{My}{Myd}+\frac{Mz}{Mzd}\leq 1$ Fy, Fz, Mx, My, Mz are working loads				

* Vibration might occur when the effective stroke is longer than 650mm.
The maximum speed should be decreased by 15% for every 100mm of increased stroke.
** The load condition is based on 10,000km operation.
*** If used on the vertical axis or in a special condition, please contact HIWIN.

Model Number for KA100-FR

KA100	-20	P	-1050	A	FR	U	S1	M
Model	Lead	Precision Grade	Effective Stroke	Slider Type	Motor Flange	Cover	Limit Switch	Motor
	5 mm 10 mm 20 mm	C: Normal P: Precision		A: Standard	FR: Right	U: Without Cover None : Standard Cover	S1: OMRON SX671 S2: OMRON SX674 S3: SUNX GX-F12A S4: SUNX GX-F12A-P None: No Limit Switch	M: Supplied With Motor None: Without Motor

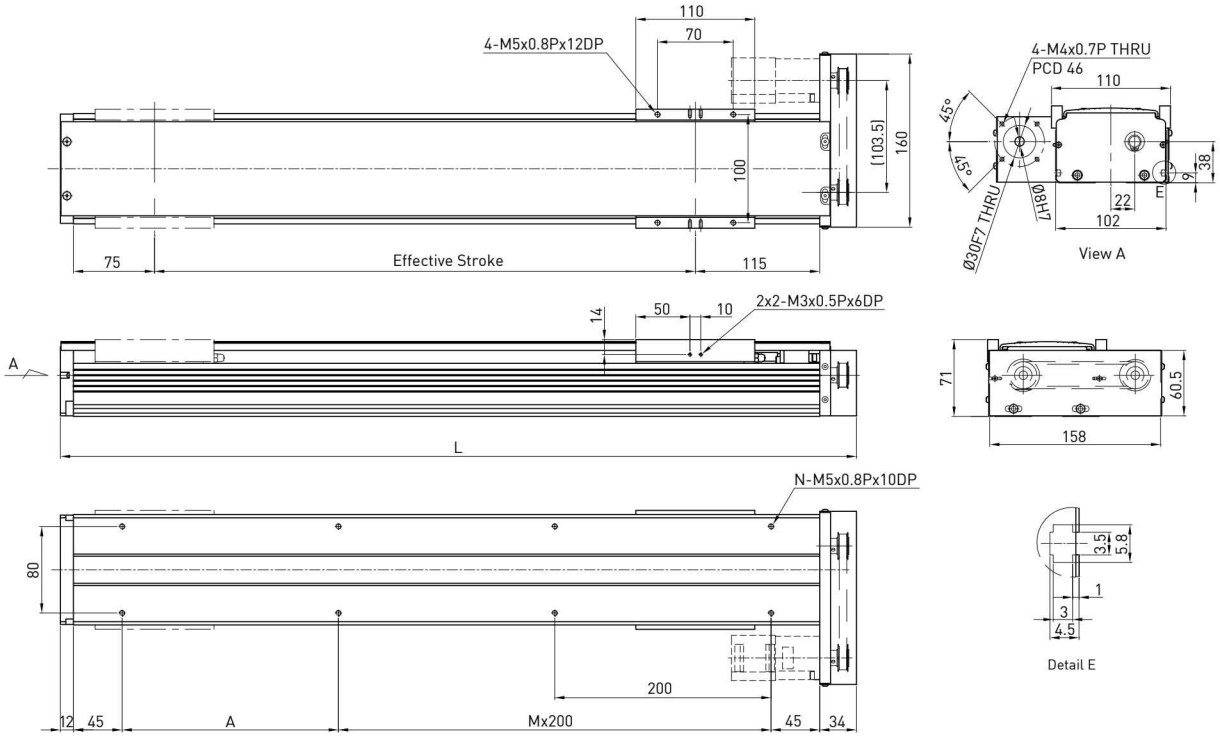

Effective stroke (mm)	L	A	M	N	Weight (kg)
100	336	200	0	4	4.91
150	386	50	1	6	5.41
200	436	100	1	6	5.88
250	486	150	1	6	6.36
300	536	200	1	6	6.85
350	586	50	2	8	7.33
400	636	100	2	8	7.82
450	686	150	2	8	8.29
500	736	200	2	8	8.76
550	786	50	3	10	9.25
600	836	100	3	10	9.73
650	886	150	3	10	10.22
700	936	200	3	10	10.71
750	986	50	4	12	11.19
800	1036	100	4	12	11.67
850	1086	150	4	12	12.15
900	1136	200	4	12	12.63
950	1186	50	5	14	13.12
1000	1236	100	5	14	13.6
1050	1286	150	5	14	14.08

AC motor output		W	100	
Drive			Ballscrew C7(normal)	
Lead		mm	5	10	20
Rated RPM		RPM	3000	3000	3000
Max linear speed*		mm/sec	250	500	1000
Rated thrust		N	280	140	70
Repeatability		mm	±0.02	
Effective stroke		mm	100~1050	
Max load (H)		kg	50	32	20
Rated dynamic load**	Fyd	N	50	50	50
	Fzd	N	500	320	200
	Mxd	N-m	16	16	16
	Myd	N-m	14	13.5	13
	Mzd	N-m	14	13.5	13

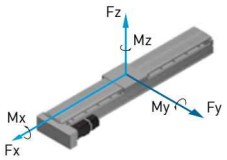

Permitted load condition* :

$$\frac{Fy}{Fyd}+\frac{Fz}{Fzd}+\frac{Mx}{Mxd}+\frac{My}{Myd}+\frac{Mz}{Mzd}\leq 1$$

Fy, Fz, Mx, My, Mz are working loads

* Vibration might occur when the effective stroke is longer than 650mm.
The maximum speed should be decreased by 15% for every 100mm of increased stroke.
** The load condition is based on 10,000km operation.
*** If used on the vertical axis or in a special condition, please contact HIWIN.

Model Number for KA100B-FL

KA100	B	-84	C	-3000	A	FL	U	S1	M
Model	Timing Belt	Pulley Perimeter	Precision Grade	Effective Stroke	Slider Type	Motor Flange	Cover	Limit Switch	Motor
			C: Normal		A: Standard	FL: Left	U: Without Cover None : Standard Cover	S1: OMRON SX671 S2: OMRON SX674 S3: SUNX GX-F12A S4: SUNX GX-F12A-P None: No Limit Switch	M: Supplied With Motor None: Without Motor

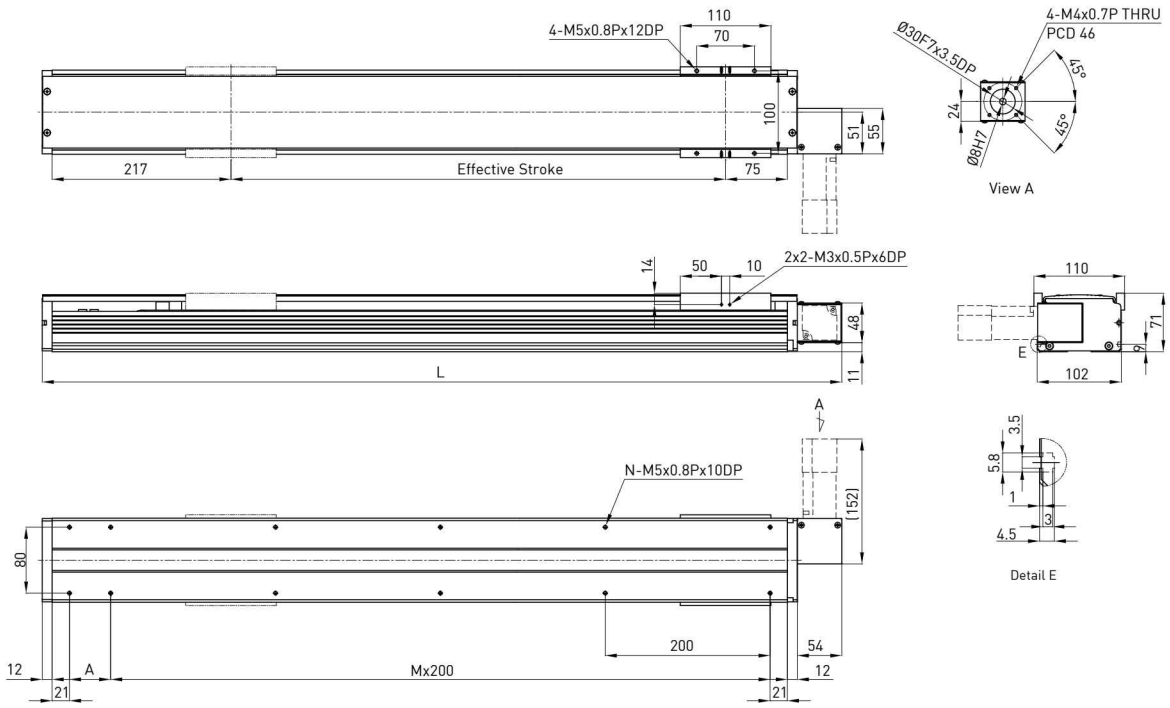

Effective stroke (mm)	L	A	M	N	Weight (kg)
200	570	50	2	8	5.41
400	770	50	3	10	7.07
600	970	50	4	12	8.83
800	1170	50	5	14	10.49
1000	1370	50	6	16	12.15
1200	1570	50	7	18	13.91
1400	1770	50	8	20	15.57
1600	1970	50	9	22	17.33
1800	2170	50	10	24	18.99
2000	2370	50	11	26	20.65
2200	2570	50	12	28	22.41
2400	2770	50	13	30	24.07
2600	2970	50	14	32	25.83
2800	3170	50	15	34	27.49
3000	3370	50	16	36	29.15

AC motor output			W	100
Drive				Timing Belt
Pulley Perimeter			mm	84
Pulley RPM			RPM	1286
Max linear speed			mm/sec	1800
Rated thrust			N	33
Repeatability			mm	±0.1
Effective stroke			mm	200~3000
Max load (H)			kg	7.5
Rated dynamic load*	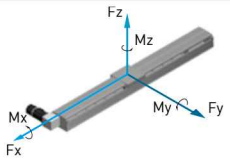	Fyd	N	50
		Fzd	N	75
		Mxd	N-m	15
		Myd	N-m	13
		Mzd	N-m	13
Permitted load condition**	$\frac{Fy}{Fyd}+\frac{Fz}{Fzd}+\frac{Mx}{Mxd}+\frac{My}{Myd}+\frac{Mz}{Mzd}\leq 1$ Fy, Fz, Mx, My, Mz are working loads			

*The load condition is based on 10,000km operation.
**For horizontal applications only. If used in a special condition, please contact HIWIN.

Model Number for KA100B-FR

KA100	B	-84	C	-3000	A	FR	U	S1	M
Model	Timing Belt	Pulley Perimeter	Precision Grade	Effective Stroke	Slider Type	Motor Flange	Cover	Limit Switch	Motor
			C: Normal		A: Standard	FR: Right	U: Without Cover None : Standard Cover	S1: OMRON SX671 S2: OMRON SX674 S3: SUNX GX-F12A S4: SUNX GX-F12A-P None: No Limit Switch	M: Supplied With Motor None: Without Motor

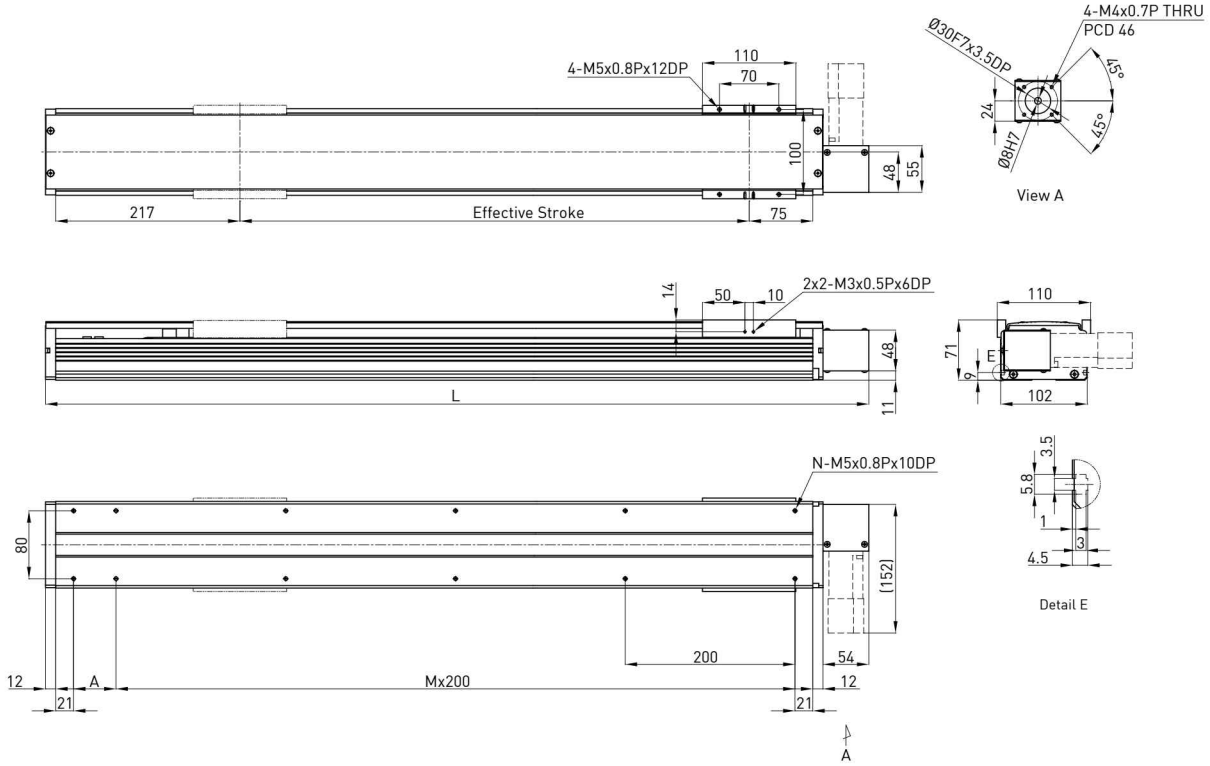

Effective stroke (mm)	L	A	M	N	Weight (kg)
200	570	50	2	8	5.41
400	770	50	3	10	7.07
600	970	50	4	12	8.83
800	1170	50	5	14	10.49
1000	1370	50	6	16	12.15
1200	1570	50	7	18	13.91
1400	1770	50	8	20	15.57
1600	1970	50	9	22	17.33
1800	2170	50	10	24	18.99
2000	2370	50	11	26	20.65
2200	2570	50	12	28	22.41
2400	2770	50	13	30	24.07
2600	2970	50	14	32	25.83
2800	3170	50	15	34	27.49
3000	3370	50	16	36	29.15

AC motor output		W	100
Drive			Timing Belt
Pulley Perimeter		mm	84
Pulley RPM		RPM	1286
Max linear speed		mm/sec	1800
Rated thrust		N	33
Repeatability		mm	±0.1
Effective stroke		mm	200~3000
Max load (H)		kg	7.5
Rated dynamic load*	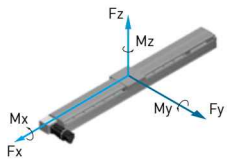	Fyd	N	50
		Fzd	N	75
		Mxd	N-m	15
		Myd	N-m	13
		Mzd	N-m	13
Permitted load condition**	$\frac{Fy}{Fyd}+\frac{Fz}{Fzd}+\frac{Mx}{Mxd}+\frac{My}{Myd}+\frac{Mz}{Mzd}\leq 1$ Fy, Fz, Mx, My, Mz are working loads		

*The load condition is based on 10,000km operation.
**For horizontal applications only. If used in a special condition, please contact HIWIN.

Model Number for KA120

KA120	-20	P	-1050	A	F0	U	S1	M
Model	Lead	Precision Grade	Effective Stroke	Slider Type	Motor Flange	Cover	Limit Switch	Motor
	5 mm 10 mm 20 mm	C: Normal P: Precision		A: Standard	F0 : Direct	U: Without Cover None : Standard Cover	S1: OMRON SX671 S2: OMRON SX674 S3: SUNX GX-F12A S4: SUNX GX-F12A-P None: No Limit Switch	M: Supplied With Motor None: Without Motor

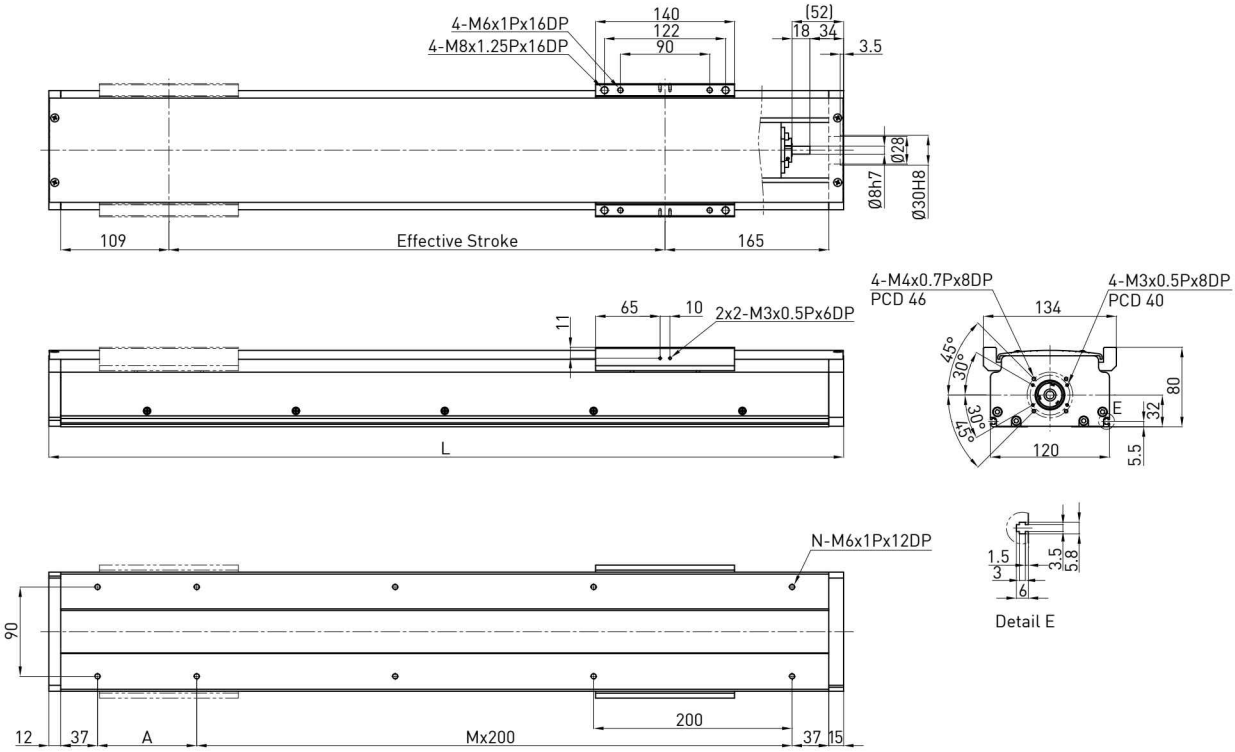

Effective stroke (mm)	L	A	M	N	Weight (kg)
100	401	100	1	6	7.5
150	451	150	1	6	8.13
200	501	200	1	6	8.76
250	551	50	2	8	9.39
300	601	100	2	8	10.02
350	651	150	2	8	10.65
400	701	200	2	8	11.28
450	751	50	3	10	11.91
500	801	100	3	10	12.54
550	851	150	3	10	13.17
600	901	200	3	10	13.8
650	951	50	4	12	14.43
700	1001	100	4	12	15.06
750	1051	150	4	12	15.69
800	1101	200	4	12	16.32
850	1151	50	5	14	16.95
900	1201	100	5	14	17.58
950	1251	150	5	14	18.21
1000	1301	200	5	14	18.84
1050	1351	50	6	16	19.47

AC motor output		W	100		
Drive			Ballscrew C7(normal)		
Lead		mm	5	10	20
Rated RPM		RPM	3000	3000	3000
Max linear speed*		mm/sec	250	500	1000
Rated thrust		N	560	280	140
Repeatability		mm	±0.02		
Effective stroke		mm	100~1050		
Max load (H)		kg	50	32	20
Rated dynamic load**	Fyd	N	50	50	50
	Fzd	N	500	320	200
	Mxd	N-m	25	27	28
	Myd	N-m	20	22	23
	Mzd	N-m	20	22	23

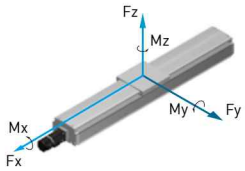

Permitted load condition* :

$$\frac{Fy}{Fyd}+\frac{Fz}{Fzd}+\frac{Mx}{Mxd}+\frac{My}{Myd}+\frac{Mz}{Mzd}\leq 1$$

Fy, Fz, Mx, My, Mz are working loads

* Vibration might occur when the effective stroke is longer than 650mm.
The maximum speed should be decreased by 15% for every 100mm of increased stroke.
** The load condition is based on 10,000km operation.
*** If used on the vertical axis or in a special condition, please contact HIWIN.

Model Number for KA136

KA136	-20	P	-1050	A	F0	U	S1	M
Model	Lead	Precision Grade	Effective Stroke	Slider Type	Motor Flange	Cover	Limit Switch	Motor
	5 mm 10 mm 20 mm	C: Normal P: Precision		A: Standard	F0 : Direct	U: Without Cover None : Standard Cover	S1: OMRON SX671 S2: OMRON SX674 S3: SUNX GX-F12A S4: SUNX GX-F12A-P None: No Limit Switch	M: Supplied With Motor None: Without Motor

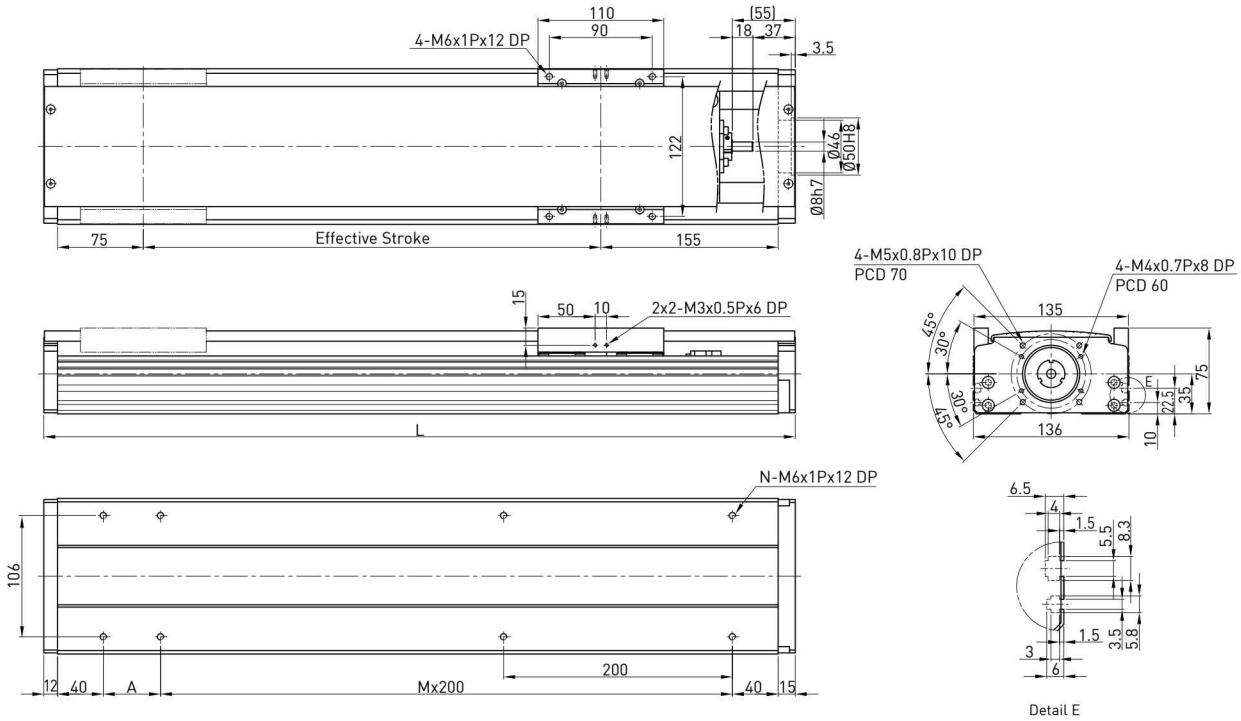

Effective stroke (mm)	L	A	M	N	Weight (kg)
100	357	50	1	6	6.19
150	407	100	1	6	6.74
200	457	150	1	6	7.29
250	507	200	1	6	7.84
300	557	50	2	8	8.39
350	607	100	2	8	8.94
400	657	150	2	8	9.49
450	707	200	2	8	10.05
500	757	50	3	10	10.6
550	807	100	3	10	11.15
600	857	150	3	10	11.7
650	907	200	3	10	12.25
700	957	50	4	12	12.8
750	1007	100	4	12	13.35
800	1057	150	4	12	13.9
850	1107	200	4	12	14.45
900	1157	50	5	14	15
950	1207	100	5	14	15.55
1000	1257	150	5	14	16.1
1050	1307	200	5	14	16.65

AC motor output		W	200	
Drive			Ballscrew C7(normal)	
Lead		mm	5	10	20
Rated RPM		RPM	3000	3000	3000
Max linear speed*		mm/sec	250	500	1000
Rated thrust		N	560	280	140
Repeatability		mm	±0.02	
Effective stroke		mm	100~1050	
Max load (H)		kg	95	75	40
Rated dynamic load**	Fyd	N	50	50	50
	Fzd	N	950	750	400
	Mxd	N-m	21	21	26
	Myd	N-m	17	17	21
	Mzd	N-m	17	17	21

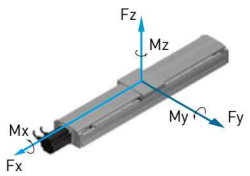

Permitted load condition* :**

$$\frac{Fy}{Fyd}+\frac{Fz}{Fzd}+\frac{Mx}{Mxd}+\frac{My}{Myd}+\frac{Mz}{Mzd}\leq 1$$

Fy, Fz, Mx, My, Mz are working loads

* Vibration might occur when the effective stroke is longer than 650mm.
The maximum speed should be decreased by 15% for every 100mm of increased stroke.
** The load condition is based on 10,000km operation.
*** If used on the vertical axis or in a special condition, please contact HIWIN.

Model Number for KA136-FD

KA136	-20	P	-1050	A	FD	U	S1	M
Model	Lead	Precision Grade	Effective Stroke	Slider Type	Motor Flange	Cover	Limit Switch	Motor
	5 mm 10 mm 20 mm	C: Normal P: Precision		A: Standard	FD: Bottom	U: Without Cover None : Standard Cover	S1: OMRON SX671 S2: OMRON SX674 S3: SUNX GX-F12A S4: SUNX GX-F12A-P None: No Limit Switch	M: Supplied With Motor None: Without Motor

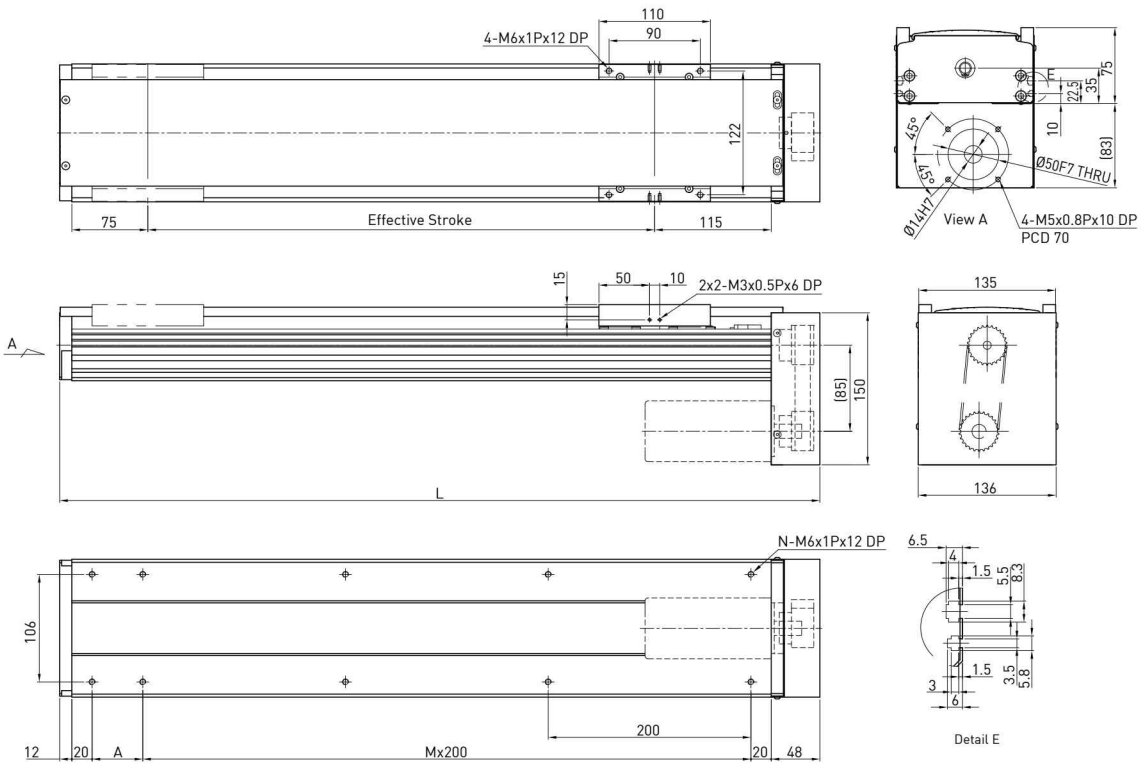

Effective stroke (mm)	L	A	M	N	Weight (kg)
100	350	50	1	6	6.31
150	400	100	1	6	6.88
200	450	150	1	6	7.44
250	500	200	1	6	8.01
300	550	50	2	8	8.56
350	600	100	2	8	9.12
400	650	150	2	8	9.68
450	700	200	2	8	10.25
500	750	50	3	10	10.81
550	800	100	3	10	11.37
600	850	150	3	10	11.94
650	900	200	3	10	12.51
700	950	50	4	12	13.06
750	1000	100	4	12	13.62
800	1050	150	4	12	14.18
850	1100	200	4	12	14.74
900	1150	50	5	14	15.3
950	1200	100	5	14	15.86
1000	1250	150	5	14	16.42
1050	1300	200	5	14	16.98

AC motor output		W	200		
Drive			Ballscrew C7(normal)		
Lead		mm	5	10	20
Rated RPM		RPM	3000	3000	3000
Max linear speed*		mm/sec	250	500	1000
Rated thrust		N	560	280	140
Repeatability		mm	±0.02		
Effective stroke		mm	100~1050		
Max load (H)		kg	95	75	40
Rated dynamic load**	Fyd	N	50	50	50
	Fzd	N	950	750	400
	Mxd	N-m	21	21	26
	Myd	N-m	17	17	21
	Mzd	N-m	17	17	21

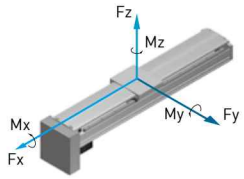

Permitted load condition* :

$$\frac{Fy}{Fyd}+\frac{Fz}{Fzd}+\frac{Mx}{Mxd}+\frac{My}{Myd}+\frac{Mz}{Mzd}\leq 1$$

Fy, Fz, Mx, My, Mz are working loads

* Vibration might occur when the effective stroke is longer than 650mm.
The maximum speed should be decreased by 15% for every 100mm of increased stroke.
** The load condition is based on 10,000km operation.
*** If used on the vertical axis or in a special condition, please contact HIWIN.

Model Number for KA136-FI

KA136	-20	P	-1050	A	FI	U	S1	M
Model	Lead	Precision Grade	Effective Stroke	Slider Type	Motor Flange	Cover	Limit Switch	Motor
	5 mm 10 mm 20 mm	C: Normal P: Precision		A: Standard	FI : Internal	U: Without Cover None : Standard Cover	S1: OMRON SX671 S2: OMRON SX674 S3: SUNX GX-F12A S4: SUNX GX-F12A-P None: No Limit Switch	M: Supplied With Motor None: Without Motor

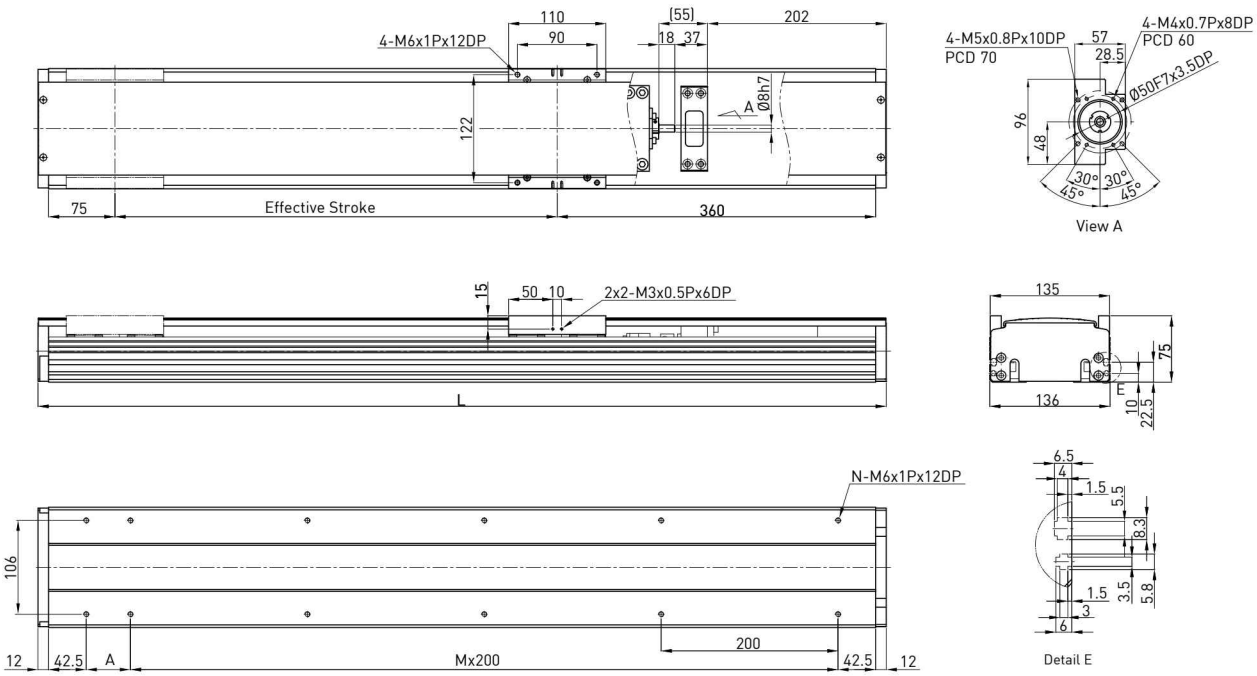

Effective stroke (mm)	L	A	M	N	Weight (kg)
100	559	50	2	8	6.62
150	609	100	2	8	7.21
200	659	150	2	8	7.8
250	709	200	2	8	8.39
300	759	50	3	10	8.98
350	809	100	3	10	9.57
400	859	150	3	10	10.15
450	909	200	3	10	10.75
500	959	50	4	12	11.34
550	1009	100	4	12	11.93
600	1059	150	4	12	12.52
650	1109	200	4	12	13.11
700	1159	50	5	14	13.71
750	1209	100	5	14	14.29
800	1259	150	5	14	14.87
850	1309	200	5	14	15.46
900	1359	50	6	16	16.05
950	1409	100	6	16	16.64
1000	1459	150	6	16	17.23
1050	1509	200	6	16	17.82

AC motor output		W	200		
Drive			Ballscrew C7(normal)		
Lead		mm	5	10	20
Rated RPM		RPM	3000	3000	3000
Max linear speed*		mm/sec	250	500	1000
Rated thrust		N	560	280	140
Repeatability		mm	±0.02		
Effective stroke		mm	100~1050		
Max load (H)		kg	95	75	40
Rated dynamic load**	Fyd	N	50	50	50
	Fzd	N	950	750	400
	Mxd	N-m	21	21	26
	Myd	N-m	17	17	21
	Mzd	N-m	17	17	21

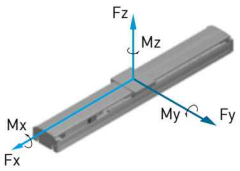

Permitted load condition* :**

$$\frac{Fy}{Fyd}+\frac{Fz}{Fzd}+\frac{Mx}{Mxd}+\frac{My}{Myd}+\frac{Mz}{Mzd}\leq 1$$

Fy, Fz, Mx, My, Mz are working loads

* Vibration might occur when the effective stroke is longer than 650mm.
The maximum speed should be decreased by 15% for every 100mm of increased stroke.
** The load condition is based on 10,000km operation.
*** If used on the vertical axis or in a special condition, please contact HIWIN.

Model Number for KA136-FL

KA136	-20	P	-1050	A	FL	U	S1	M
Model	Lead	Precision Grade	Effective Stroke	Slider Type	Motor Flange	Cover	Limit Switch	Motor
	5 mm 10 mm 20 mm	C: Normal P: Precision		A: Standard	FL: Left	U: Without Cover None : Standard Cover	S1: OMRON SX671 S2: OMRON SX674 S3: SUNX GX-F12A S4: SUNX GX-F12A-P None: No Limit Switch	M: Supplied With Motor None: Without Motor

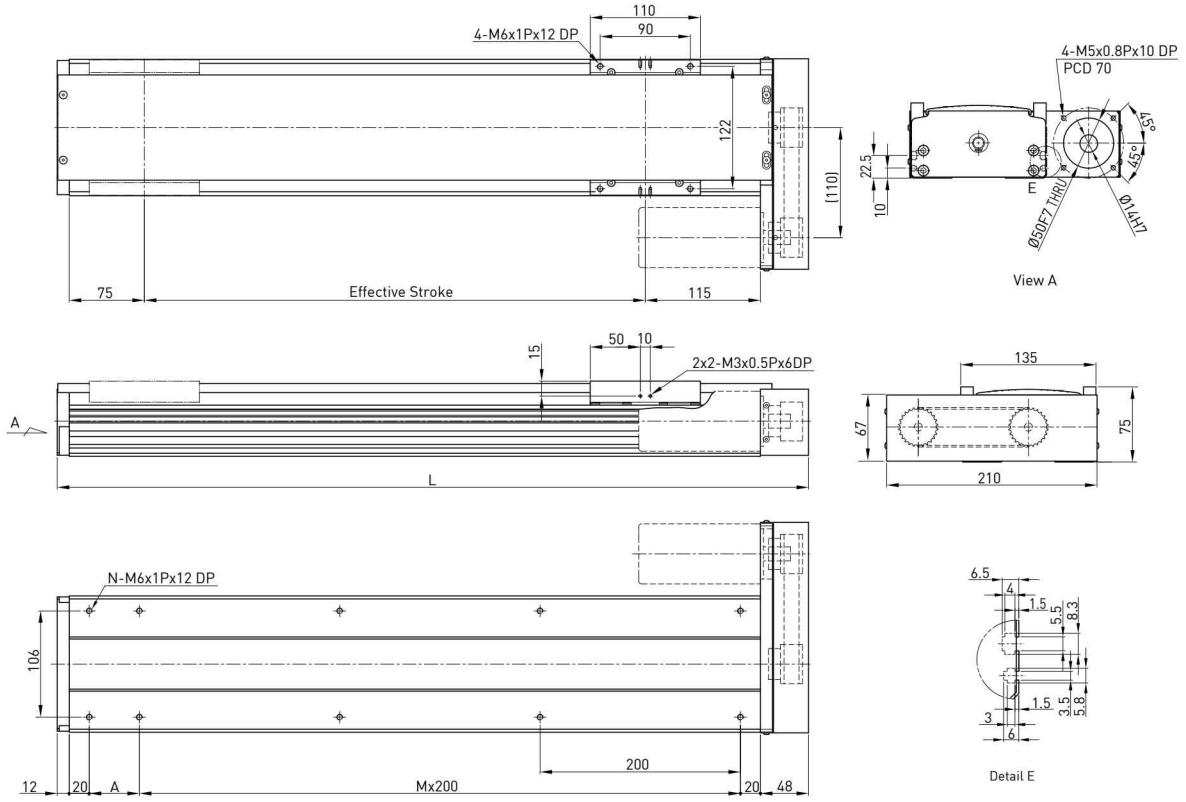

Effective stroke (mm)	L	A	M	N	Weight (kg)
100	350	50	1	6	6.31
150	400	100	1	6	6.88
200	450	150	1	6	7.44
250	500	200	1	6	8.01
300	550	50	2	8	8.56
350	600	100	2	8	9.12
400	650	150	2	8	9.68
450	700	200	2	8	10.25
500	750	50	3	10	10.81
550	800	100	3	10	11.37
600	850	150	3	10	11.94
650	900	200	3	10	12.51
700	950	50	4	12	13.06
750	1000	100	4	12	13.62
800	1050	150	4	12	14.18
850	1100	200	4	12	14.74
900	1150	50	5	14	15.3
950	1200	100	5	14	15.86
1000	1250	150	5	14	16.42
1050	1300	200	5	14	16.98

AC motor output		W	200		
Drive			Ballscrew C7(normal)		
Lead		mm	5	10	20
Rated RPM		RPM	3000	3000	3000
Max linear speed*		mm/sec	250	500	1000
Rated thrust		N	560	280	140
Repeatability		mm	±0.02		
Effective stroke		mm	100~1050		
Max load (H)		kg	95	75	40
Rated dynamic load**	Fyd	N	50	50	50
	Fzd	N	950	750	400
	Mxd	N-m	21	21	26
	Myd	N-m	17	17	21
	Mzd	N-m	17	17	21

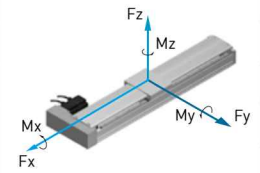

Permitted load condition* :

$$\frac{Fy}{Fyd}+\frac{Fz}{Fzd}+\frac{Mx}{Mxd}+\frac{My}{Myd}+\frac{Mz}{Mzd}\leq 1$$

Fy, Fz, Mx, My, Mz are working loads

* Vibration might occur when the effective stroke is longer than 650mm.
The maximum speed should be decreased by 15% for every 100mm of increased stroke.
** The load condition is based on 10,000km operation.
*** If used on the vertical axis or in a special condition, please contact HIWIN.

Model Number for KA136-FR

KA136	-20	P	-1050	A	FR	U	S1	M
Model	Lead	Precision Grade	Effective Stroke	Slider Type	Motor Flange	Cover	Limit Switch	Motor
	5 mm 10 mm 20 mm	C: Normal P: Precision		A: Standard	FR: Right	U: Without Cover None : Standard Cover	S1: OMRON SX671 S2: OMRON SX674 S3: SUNX GX-F12A S4: SUNX GX-F12A-P None: No Limit Switch	M: Supplied With Motor None: Without Motor

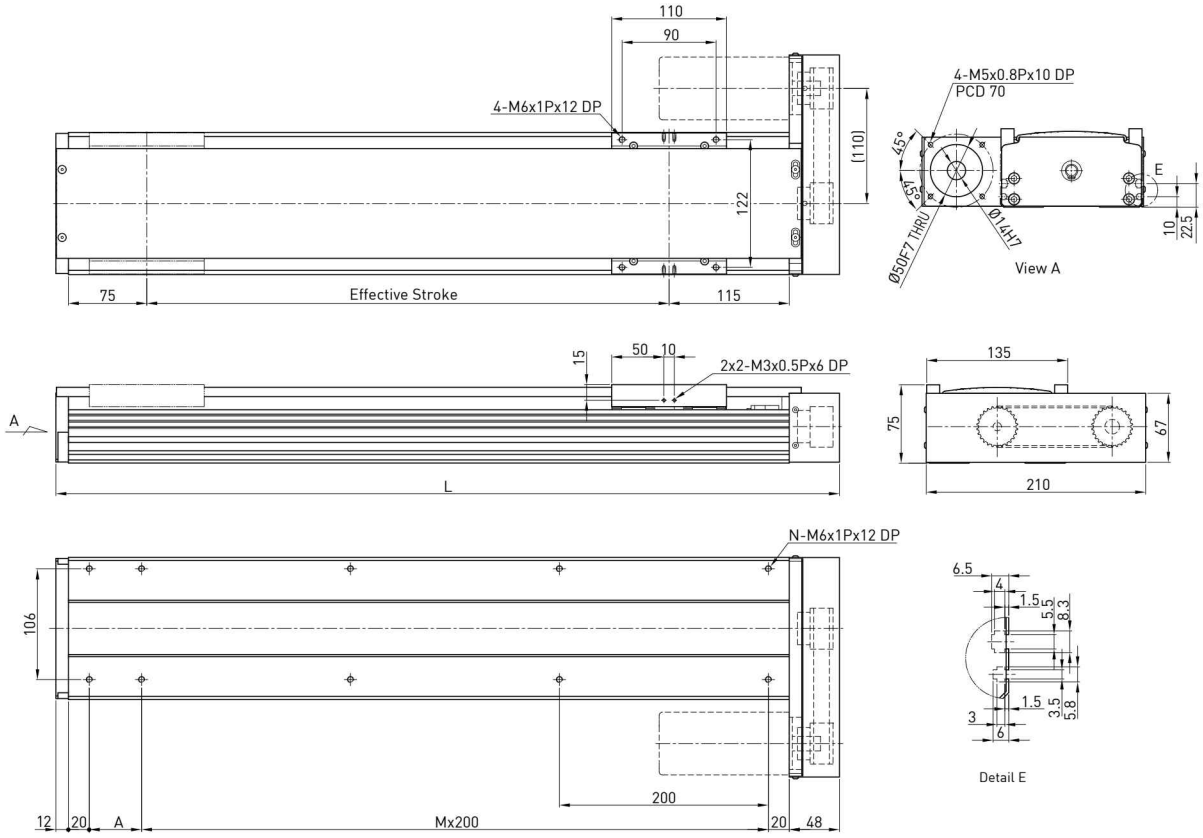

Effective stroke (mm)	L	A	M	N	Weight (kg)
100	350	50	1	6	6.31
150	400	100	1	6	6.88
200	450	150	1	6	7.44
250	500	200	1	6	8.01
300	550	50	2	8	8.56
350	600	100	2	8	9.12
400	650	150	2	8	9.68
450	700	200	2	8	10.25
500	750	50	3	10	10.81
550	800	100	3	10	11.37
600	850	150	3	10	11.94
650	900	200	3	10	12.51
700	950	50	4	12	13.06
750	1000	100	4	12	13.62
800	1050	150	4	12	14.18
850	1100	200	4	12	14.74
900	1150	50	5	14	15.3
950	1200	100	5	14	15.86
1000	1250	150	5	14	16.42
1050	1300	200	5	14	16.98

AC motor output		W	200	
Drive			Ballscrew C7(normal)	
Lead		mm	5	10	20
Rated RPM		RPM	3000	3000	3000
Max linear speed*		mm/sec	250	500	1000
Rated thrust		N	560	280	140
Repeatability		mm	±0.02	
Effective stroke		mm	100~1050	
Max load (H)		kg	95	75	40
Rated dynamic load**	Fyd	N	50	50	50
	Fzd	N	950	750	400
	Mxd	N-m	21	21	26
	Myd	N-m	17	17	21
	Mzd	N-m	17	17	21

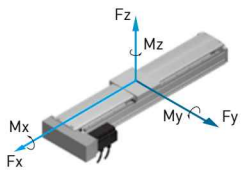

Permitted load condition***

$$\frac{Fy}{Fyd}+\frac{Fz}{Fzd}+\frac{Mx}{Mxd}+\frac{My}{Myd}+\frac{Mz}{Mzd}\leq 1$$

Fy, Fz, Mx, My, Mz are working loads

* Vibration might occur when the effective stroke is longer than 650mm.
The maximum speed should be decreased by 15% for every 100mm of increased stroke.
** The load condition is based on 10,000km operation.
*** If used on the vertical axis or in a special condition, please contact HIWIN.

Model Number for KA136B-FL

KA136	B	-120	C	-3000	A	FL	U	S1	M
Model	Timing Belt	Pulley Perimeter	Precision Grade	Effective Stroke	Slider Type	Motor Flange	Cover	Limit Switch	Motor
			C: Normal		A: Standard	FL: Left	U: Without Cover None : Standard Cover	S1: OMRON SX671 S2: OMRON SX674 S3: SUNX GX-F12A S4: SUNX GX-F12A-P None: No Limit Switch	M: Supplied With Motor None: Without Motor

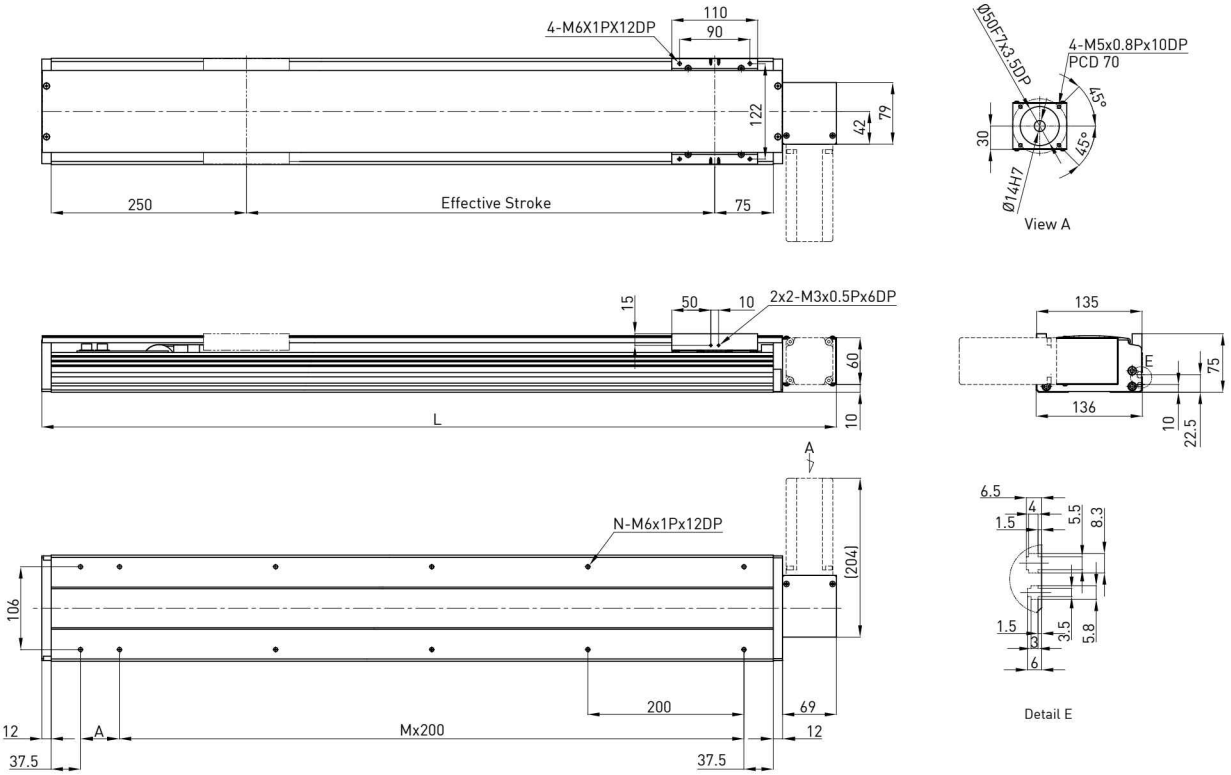

Effective stroke (mm)	L	A	M	N	Weight (kg)
200	618	50	2	8	6.97
400	818	50	3	10	8.93
600	1018	50	4	12	11.01
800	1218	50	5	14	12.97
1000	1418	50	6	16	14.93
1200	1618	50	7	18	16.99
1400	1818	50	8	20	18.95
1600	2018	50	9	22	21.01
1800	2218	50	10	24	22.97
2000	2418	50	11	26	24.93
2200	2618	50	12	28	26.99
2400	2818	50	13	30	28.95
2600	3018	50	14	32	31.01
2800	3218	50	15	34	32.97
3000	3418	50	16	36	34.93

AC motor output		W	200
Drive			Timing Belt
Pulley Perimeter		mm	120
Pulley RPM		RPM	900
Max linear speed		mm/sec	1800
Rated thrust		N	67
Repeatability		mm	±0.1
Effective stroke		mm	200~3000
Max load (H)		kg	15
Rated dynamic load*	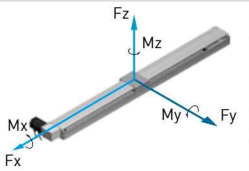	Fyd	N	50
		Fzd	N	150
		Mxd	N-m	29
		Myd	N-m	24
		Mzd	N-m	24
Permitted load condition**	$\frac{Fy}{Fyd}+\frac{Fz}{Fzd}+\frac{Mx}{Mxd}+\frac{My}{Myd}+\frac{Mz}{Mzd}\leq 1$ Fy, Fz, Mx, My, Mz are working loads		

*The load condition is based on 10,000km operation.
**For horizontal applications only. If used in a special condition, please contact HIWIN.

Model Number for KA136B-FR

KA136	B	-120	C	-3000	A	FR	U	S1	M
Model	Timing Belt	Pulley Perimeter	Precision Grade	Effective Stroke	Slider Type	Motor Flange	Cover	Limit Switch	Motor
			C: Normal		A: Standard	FR: Right	U: Without Cover None : Standard Cover	S1: OMRON SX671 S2: OMRON SX674 S3: SUNX GX-F12A S4: SUNX GX-F12A-P None: No Limit Switch	M: Supplied With Motor None: Without Motor

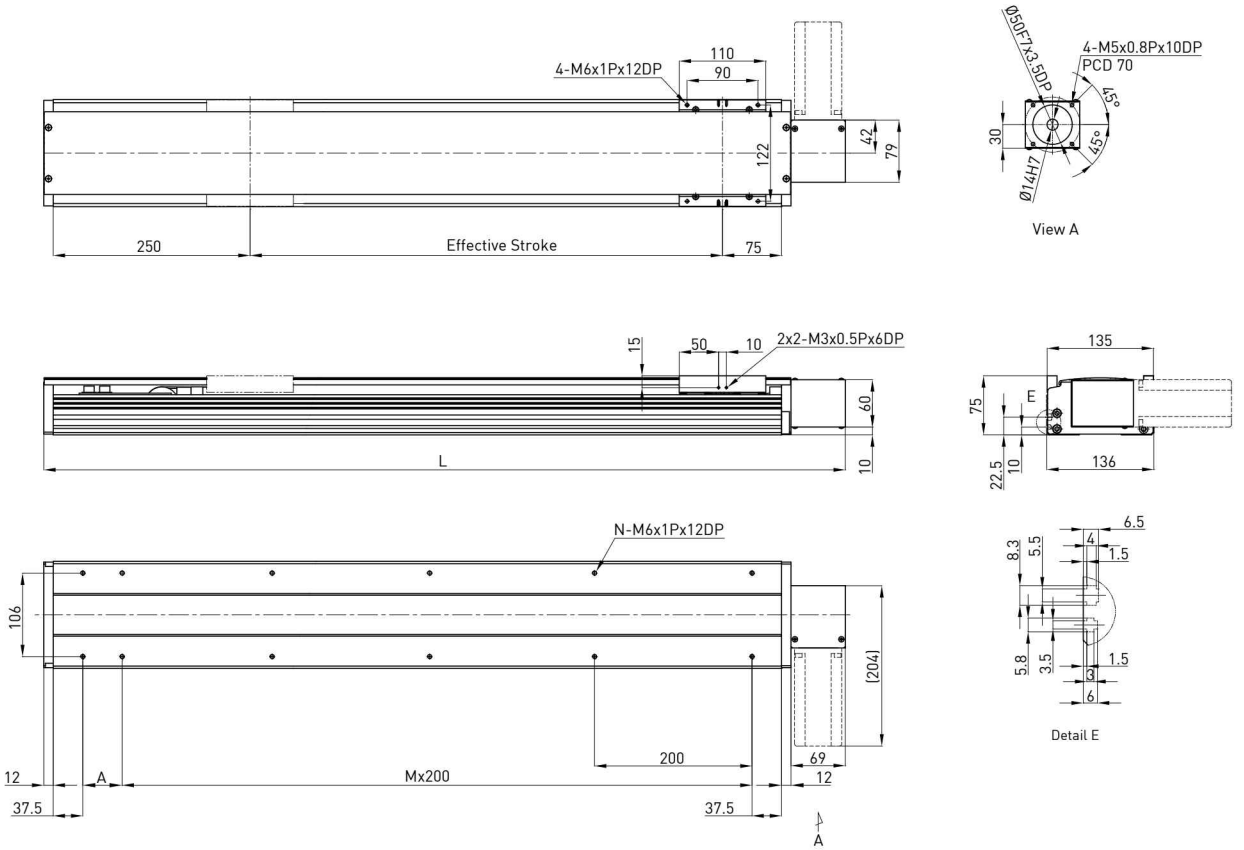

Effective stroke (mm)	L	A	M	N	Weight (kg)
200	618	50	2	8	6.97
400	818	50	3	10	8.93
600	1018	50	4	12	11.01
800	1218	50	5	14	12.97
1000	1418	50	6	16	14.93
1200	1618	50	7	18	16.99
1400	1818	50	8	20	18.95
1600	2018	50	9	22	21.01
1800	2218	50	10	24	22.97
2000	2418	50	11	26	24.93
2200	2618	50	12	28	26.99
2400	2818	50	13	30	28.95
2600	3018	50	14	32	31.01
2800	3218	50	15	34	32.97
3000	3418	50	16	36	34.93

AC motor output		W	200
Drive			Timing Belt
Pulley Perimeter		mm	120
Pulley RPM		RPM	900
Max linear speed		mm/sec	1800
Rated thrust		N	67
Repeatability		mm	±0.1
Effective stroke		mm	200~3000
Max load (H)		kg	15
Rated dynamic load*	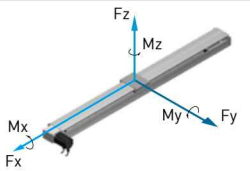	Fyd	N	50
		Fzd	N	150
		Mxd	N-m	29
		Myd	N-m	24
		Mzd	N-m	24
Permitted load condition**	$\frac{Fy}{Fyd}+\frac{Fz}{Fzd}+\frac{Mx}{Mxd}+\frac{My}{Myd}+\frac{Mz}{Mzd}\leq 1$ Fy, Fz, Mx, My, Mz are working loads		

*The load condition is based on 10,000km operation.
**For horizontal applications only. If used in a special condition, please contact HIWIN.

Model Number for KA150

KA150	-10	P	-1250	A	F0	U	S1	M
Model	Lead	Precision Grade	Effective Stroke	Slider Type	Motor Flange	Cover	Limit Switch	Motor
	10 mm 20 mm	C: Normal P: Precision		A: Standard	F0 : Direct	U: Without Cover None : Standard Cover	S1: OMRON SX671 S2: OMRON SX674 S3: SUNX GX-F12A S4: SUNX GX-F12A-P None: No Limit Switch	M: Supplied With Motor None: Without Motor

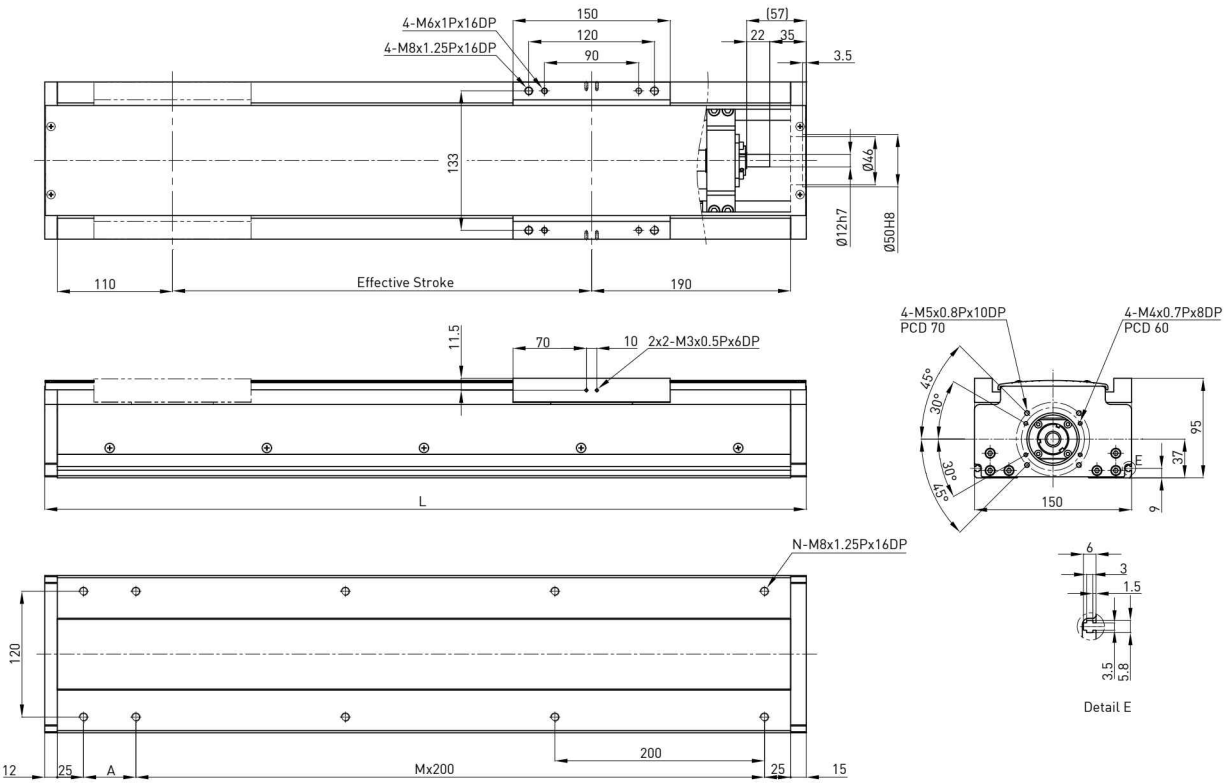

Effective stroke (mm)	L	A	M	N	Weight (kg)
150	477	200	1	6	12.71
200	527	50	2	8	13.59
250	577	100	2	8	14.47
300	627	150	2	8	15.35
350	677	200	2	8	16.23
400	727	50	3	10	17.11
450	777	100	3	10	17.99
500	827	150	3	10	18.87
550	877	200	3	10	19.75
600	927	50	4	12	20.63
650	977	100	4	12	21.51
700	1027	150	4	12	22.39
750	1077	200	4	12	23.27
800	1127	50	5	14	24.15
850	1177	100	5	14	25.03
900	1227	150	5	14	25.91
950	1277	200	5	14	26.79
1000	1327	50	6	16	27.67
1050	1377	100	6	16	28.55
1100	1427	150	6	16	29.43
1150	1477	200	6	16	30.31
1200	1527	50	7	18	31.19
1250	1577	100	7	18	32.07

AC motor output		W	200	
Drive			Ballscrew C7(normal)	
Lead		mm	10	20
Rated RPM		RPM	3000	3000
Max linear speed*		mm/sec	500	1000
Rated thrust		N	280	140
Repeatability		mm	±0.02	
Effective stroke		mm	150~1250	
Max load (H)		kg	80	40
Rated dynamic load**	Fyd	N	50	50
	Fzd	N	800	400
	Mxd	N-m	56	63
	Myd	N-m	49	53
	Mzd	N-m	49	53
Permitted load condition***	$\frac{Fy}{Fyd}+\frac{Fz}{Fzd}+\frac{Mx}{Mxd}+\frac{My}{Myd}+\frac{Mz}{Mzd}\leq 1$ Fy, Fz, Mx, My, Mz are working loads			

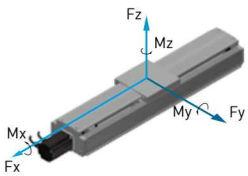

* Vibration might occur when the effective stroke is longer than 650mm.
The maximum speed should be decreased by 15% for every 100mm of increased stroke.
** The load condition is based on 10,000km operation.
*** If used on the vertical axis or in a special condition, please contact HIWIN.

Model Number for KA170

KA170	-20	P	-1250	A	F0	U	S1	M
Model	Lead	Precision Grade	Effective Stroke	Slider Type	Motor Flange	Cover	Limit Switch	Motor
	10 mm 20 mm	C: Normal P: Precision		A: Standard	F0 : Direct	U: Without Cover None : Standard Cover	S1: OMRON SX671 S2: OMRON SX674 S3: SUNX GX-F12A S4: SUNX GX-F12A-P None: No Limit Switch	M: Supplied With Motor None: Without Motor

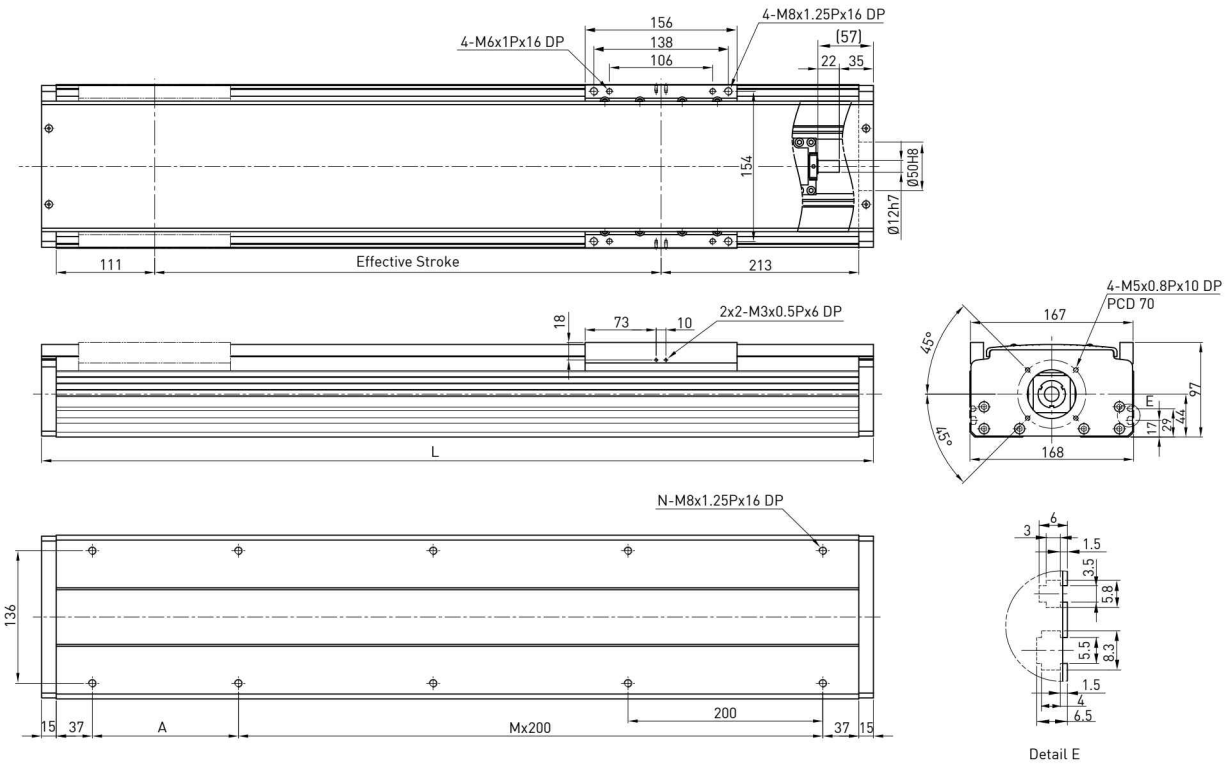

Effective stroke (mm)	L	A	M	N	Weight (kg)
150	504	200	1	6	14.57
200	554	50	2	8	15.45
250	604	100	2	8	16.33
300	654	150	2	8	17.21
350	704	200	2	8	18.09
400	754	50	3	10	18.97
450	804	100	3	10	19.85
500	854	150	3	10	20.73
550	904	200	3	10	21.61
600	954	50	4	12	22.49
650	1004	100	4	12	23.37
700	1054	150	4	12	24.25
750	1104	200	4	12	25.13
800	1154	50	5	14	26.01
850	1204	100	5	14	26.89
900	1254	150	5	14	27.77
950	1304	200	5	14	28.65
1000	1354	50	6	16	29.53
1050	1404	100	6	16	30.41
1100	1454	150	6	16	31.29
1150	1504	200	6	16	32.17
1200	1554	50	7	18	33.05
1250	1604	100	7	18	33.92

AC motor output		W	400	
Drive			Ballscrew C7(normal)	
Lead		mm	10	20
Rated RPM		RPM	3000	3000
Max linear speed*		mm/sec	500	1000
Rated thrust		N	560	280
Repeatability		mm	±0.02	
Effective stroke		mm	150~1250	
Max load (H)		kg	125	75
Rated dynamic load**	Fyd	N	50	50
	Fzd	N	1250	750
	Mxd	N-m	100	110
	Myd	N-m	85	90
	Mzd	N-m	85	90
Permitted load condition***	$\frac{Fy}{Fyd}+\frac{Fz}{Fzd}+\frac{Mx}{Mxd}+\frac{My}{Myd}+\frac{Mz}{Mzd}\leq 1$ Fy, Fz, Mx, My, Mz are working loads			

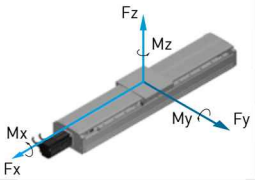

* Vibration might occur when the effective stroke is longer than 650mm.
The maximum speed should be decreased by 15% for every 100mm of increased stroke.
** The load condition is based on 10,000km operation.
*** If used on the vertical axis or in a special condition, please contact HIWIN.

Model Number for KA170-FD

KA170	-20	P	-1250	A	FD	U	S1	M
Model	Lead	Precision Grade	Effective Stroke	Slider Type	Motor Flange	Cover	Limit Switch	Motor
	10 mm 20 mm	C: Normal P: Precision		A: Standard	FD: Bottom	U: Without Cover None : Standard Cover	S1: OMRON SX671 S2: OMRON SX674 S3: SUNX GX-F12A S4: SUNX GX-F12A-P None: No Limit Switch	M: Supplied With Motor None: Without Motor

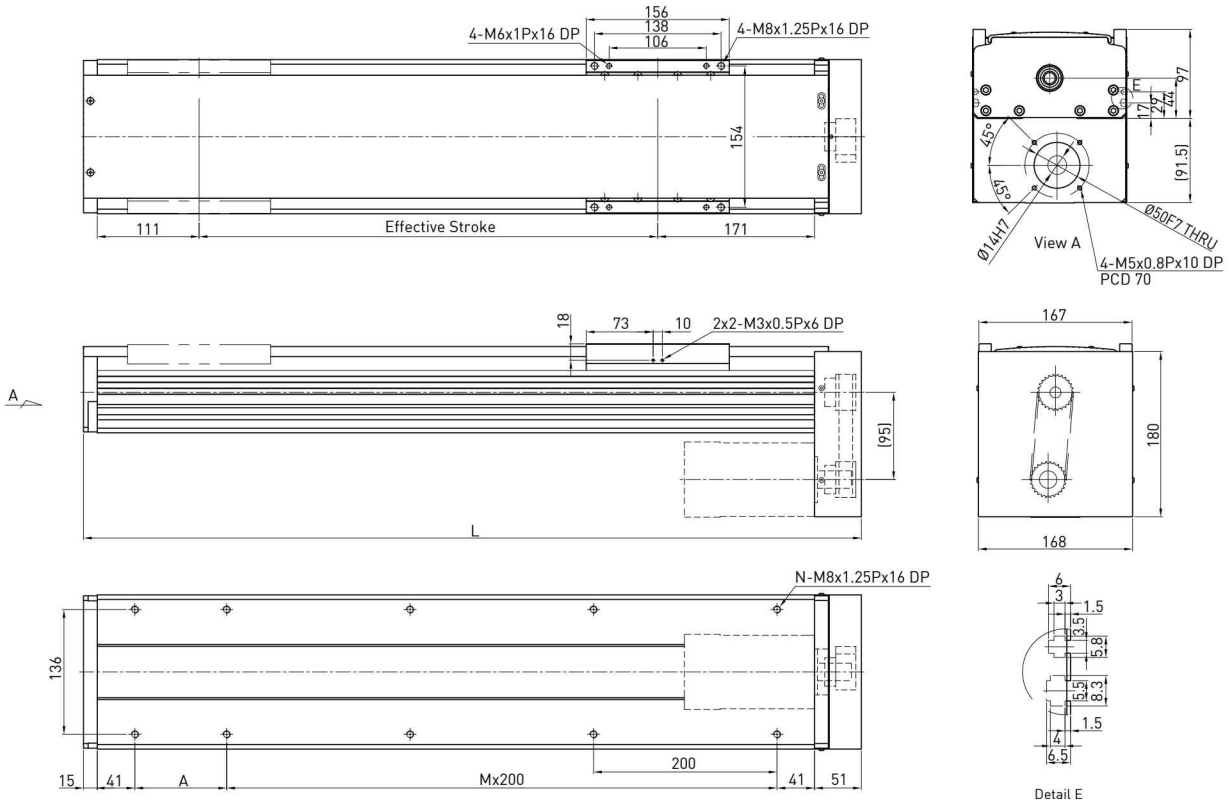

Effective stroke (mm)	L	A	M	N	Weight (kg)
150	498	150	1	6	15.01
200	548	200	1	6	15.92
250	598	50	2	8	16.82
300	648	100	2	8	17.73
350	698	150	2	8	18.63
400	748	200	2	8	19.54
450	798	50	3	10	20.45
500	848	100	3	10	21.35
550	898	150	3	10	22.26
600	948	200	3	10	23.17
650	998	50	4	12	24.07
700	1048	100	4	12	24.98
750	1098	150	4	12	25.89
800	1148	200	4	12	26.79
850	1198	50	5	14	27.71
900	1248	100	5	14	28.61
950	1298	150	5	14	29.51
1000	1348	200	5	14	30.42
1050	1398	50	6	16	31.33
1100	1448	100	6	16	32.23
1150	1498	150	6	16	33.14
1200	1548	200	6	16	34.04
1250	1598	50	7	18	34.94

AC motor output		W	400	
Drive			Ballscrew C7(normal)	
Lead		mm	10	20
Rated RPM		RPM	3000	3000
Max linear speed*		mm/sec	500	1000
Rated thrust		N	560	280
Repeatability		mm	±0.02	
Effective stroke		mm	150~1250	
Max load (H)		kg	125	75
Rated dynamic load**	Fyd	N	50	50
	Fzd	N	1250	750
	Mxd	N-m	100	110
	Myd	N-m	85	90
	Mzd	N-m	85	90
Permitted load condition***	$\frac{Fy}{Fyd}+\frac{Fz}{Fzd}+\frac{Mx}{Mxd}+\frac{My}{Myd}+\frac{Mz}{Mzd}\leq 1$ Fy, Fz, Mx, My, Mz are working loads			

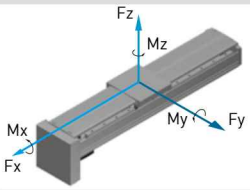

* Vibration might occur when the effective stroke is longer than 650mm.
The maximum speed should be decreased by 15% for every 100mm of increased stroke.
** The load condition is based on 10,000km operation.
*** If used on the vertical axis or in a special condition, please contact HIWIN.

Model Number for KA170-FI

KA170	-20	P	-1250	A	FI	U	S1	M
Model	Lead	Precision Grade	Effective Stroke	Slider Type	Motor Flange	Cover	Limit Switch	Motor
	10 mm 20 mm	P: Precision C: Normal		A: Standard	FI : Internal	U: Without Cover None : Standard Cover	S1: OMRON SX671 S2: OMRON SX674 S3: SUNX GX-F12A S4: SUNX GX-F12A-P None: No Limit Switch	M: Supplied With Motor None: Without Motor

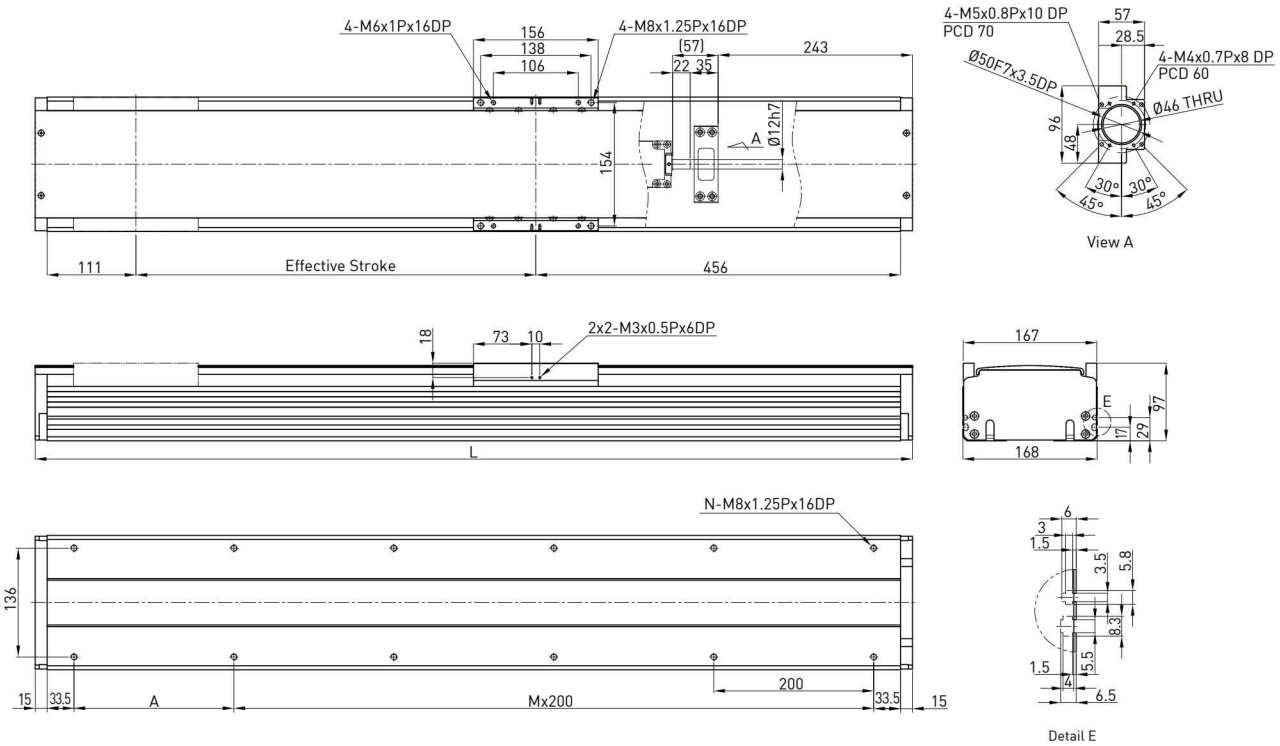

Effective stroke (mm)	L	A	M	N	Weight (kg)
150	747	50	3	10	15.59
200	797	100	3	10	16.53
250	847	150	3	10	17.47
300	897	200	3	10	18.42
350	947	50	4	12	19.36
400	997	100	4	12	20.31
450	1047	150	4	12	23.24
500	1097	200	4	12	22.18
550	1147	50	5	14	23.12
600	1197	100	5	14	24.06
650	1247	150	5	14	25.01
700	1297	200	5	14	25.95
750	1347	50	6	16	26.89
800	1397	100	6	16	27.83
850	1447	150	6	16	28.77
900	1497	200	6	16	29.71
950	1547	50	7	18	30.66
1000	1597	100	7	18	31.61
1050	1647	150	7	18	32.54
1100	1697	200	7	18	33.48
1150	1747	50	8	20	34.42
1200	1797	100	8	20	35.36
1250	1847	150	8	20	36.31

AC motor output		W	400	
Drive			Ballscrew C7(normal)	
Lead		mm	10	20
Rated RPM		RPM	3000	3000
Max linear speed*		mm/sec	500	1000
Rated thrust		N	560	280
Repeatability		mm	±0.02	
Effective stroke		mm	150~1250	
Max load (H)		kg	125	75
Rated dynamic load**	Fyd	N	50	50
	Fzd	N	1250	750
	Mxd	N-m	100	110
	Myd	N-m	85	90
	Mzd	N-m	85	90
Permitted load condition***	$\frac{Fy}{Fyd}+\frac{Fz}{Fzd}+\frac{Mx}{Mxd}+\frac{My}{Myd}+\frac{Mz}{Mzd}\leq 1$ Fy, Fz, Mx, My, Mz are working loads			

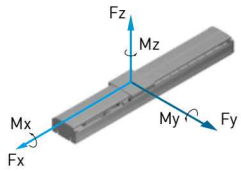

* Vibration might occur when the effective stroke is longer than 650mm.
The maximum speed should be decreased by 15% for every 100mm of increased stroke.
** The load condition is based on 10,000km operation.
*** If used on the vertical axis or in a special condition, please contact HIWIN.

Model Number for KA170-FL

KA170	-20	P	-1250	A	FL	U	S1	M
Model	Lead	Precision Grade	Effective Stroke	Slider Type	Motor Flange	Cover	Limit Switch	Motor
	10 mm 20 mm	C: Normal P: Precision		A: Standard	FL: Left	U: Without Cover None : Standard Cover	S1: OMRON SX671 S2: OMRON SX674 S3: SUNX GX-F12A S4: SUNX GX-F12A-P None: No Limit Switch	M: Supplied With Motor None: Without Motor

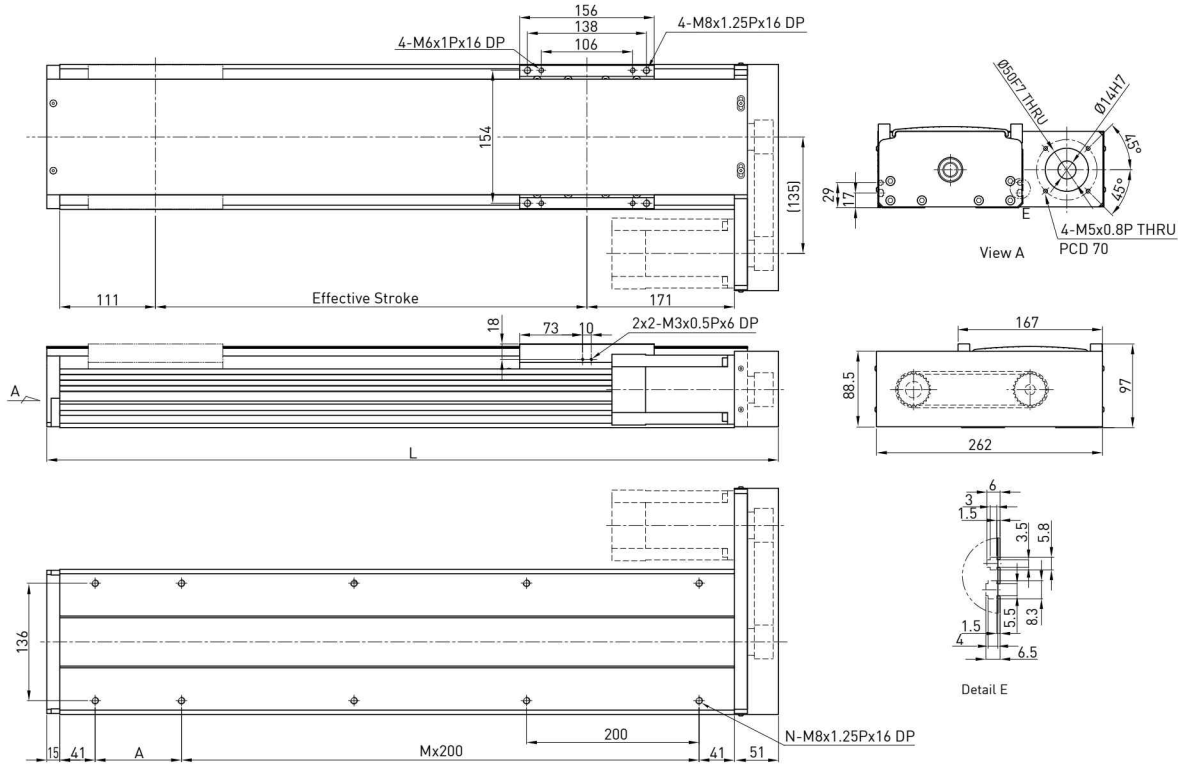

Effective stroke (mm)	L	A	M	N	Weight (kg)
150	498	150	1	6	15.01
200	548	200	1	6	15.92
250	598	50	2	8	16.82
300	648	100	2	8	17.73
350	698	150	2	8	18.63
400	748	200	2	8	19.54
450	798	50	3	10	20.45
500	848	100	3	10	21.35
550	898	150	3	10	22.26
600	948	200	3	10	23.17
650	998	50	4	12	24.07
700	1048	100	4	12	24.98
750	1098	150	4	12	25.89
800	1148	200	4	12	26.79
850	1198	50	5	14	27.71
900	1248	100	5	14	28.61
950	1298	150	5	14	29.51
1000	1348	200	5	14	30.42
1050	1398	50	6	16	31.33
1100	1448	100	6	16	32.23
1150	1498	150	6	16	33.14
1200	1548	200	6	16	34.04
1250	1598	50	7	18	34.94

AC motor output		W	400	
Drive			Ballscrew C7(normal)	
Lead		mm	10	20
Rated RPM		RPM	3000	3000
Max linear speed*		mm/sec	500	1000
Rated thrust		N	560	280
Repeatability		mm	±0.02	
Effective stroke		mm	150~1250	
Max load (H)		kg	125	75
Rated dynamic load**	Fyd	N	50	50
	Fzd	N	1250	750
	Mxd	N-m	100	110
	Myd	N-m	85	90
	Mzd	N-m	85	90
Permitted load condition***	$\frac{Fy}{Fyd}+\frac{Fz}{Fzd}+\frac{Mx}{Mxd}+\frac{My}{Myd}+\frac{Mz}{Mzd}\leq 1$ Fy, Fz, Mx, My, Mz are working loads			

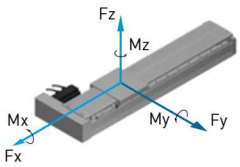

* Vibration might occur when the effective stroke is longer than 650mm.
The maximum speed should be decreased by 15% for every 100mm of increased stroke.
** The load condition is based on 10,000km operation.
*** If used on the vertical axis or in a special condition, please contact HIWIN.

Model Number for KA170-FR

KA170	-20	P	-1250	A	FR	U	S1	M
Model	Lead	Precision Grade	Effective Stroke	Slider Type	Motor Flange	Cover	Limit Switch	Motor
	10 mm 20 mm	C: Normal P: Precision		A: Standard	FR: Right	U: Without Cover None : Standard Cover	S1: OMRON SX671 S2: OMRON SX674 S3: SUNX GX-F12A S4: SUNX GX-F12A-P None: No Limit Switch	M: Supplied With Motor None: Without Motor

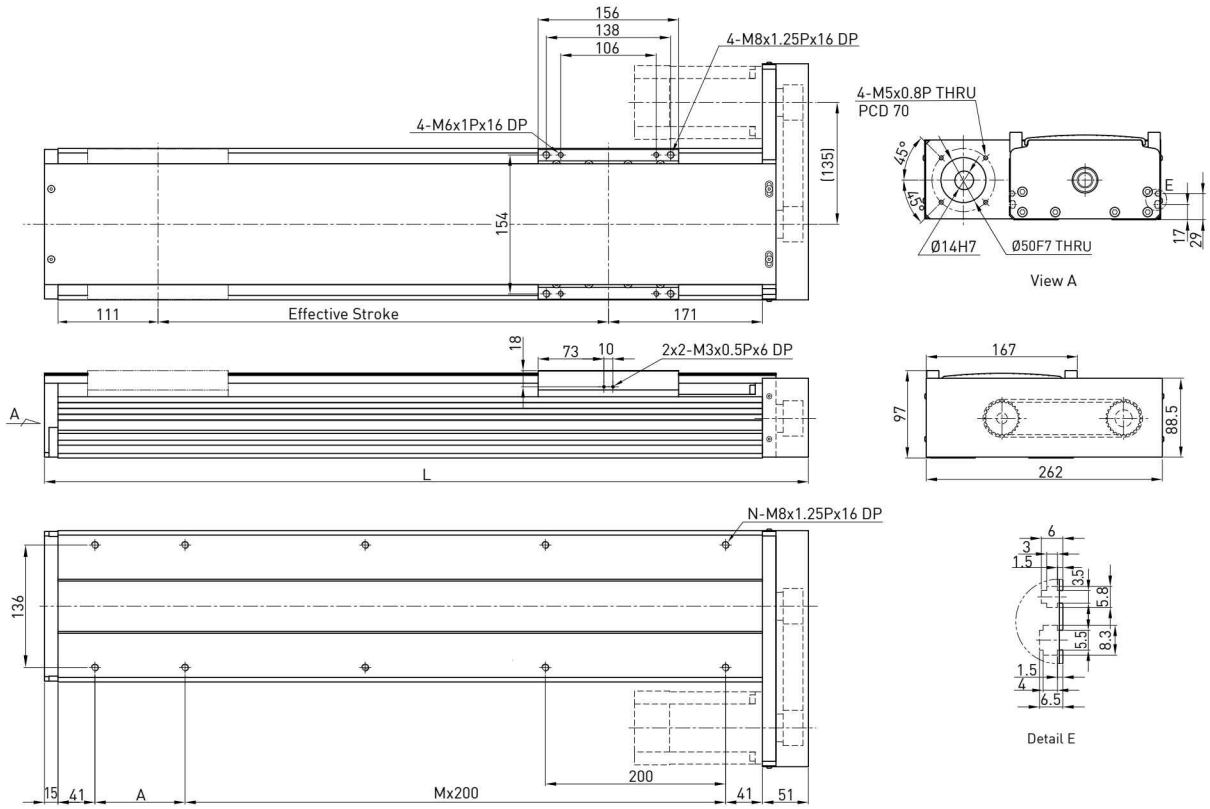

Effective stroke (mm)	L	A	M	N	Weight (kg)
150	498	150	1	6	15.01
200	548	200	1	6	15.92
250	598	50	2	8	16.82
300	648	100	2	8	17.73
350	698	150	2	8	18.63
400	748	200	2	8	19.54
450	798	50	3	10	20.45
500	848	100	3	10	21.35
550	898	150	3	10	22.26
600	948	200	3	10	23.17
650	998	50	4	12	24.07
700	1048	100	4	12	24.98
750	1098	150	4	12	25.89
800	1148	200	4	12	26.79
850	1198	50	5	14	27.71
900	1248	100	5	14	28.61
950	1298	150	5	14	29.51
1000	1348	200	5	14	30.42
1050	1398	50	6	16	31.33
1100	1448	100	6	16	32.23
1150	1498	150	6	16	33.14
1200	1548	200	6	16	34.04
1250	1598	50	7	18	34.94

AC motor output		W	400	
Drive			Ballscrew C7(normal)	
Lead		mm	10	20
Rated RPM		RPM	3000	3000
Max linear speed*		mm/sec	500	1000
Rated thrust		N	560	280
Repeatability		mm	±0.02	
Effective stroke		mm	150~1250	
Max load (H)		kg	125	75
Rated dynamic load**	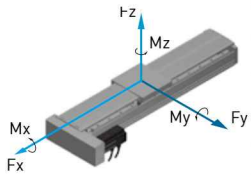 Fyd	N	50	50
	Fzd	N	1250	750
	Mxd	N-m	100	110
	Myd	N-m	85	90
	Mzd	N-m	85	90
Permitted load condition***	$\frac{Fy}{Fyd}+\frac{Fz}{Fzd}+\frac{Mx}{Mxd}+\frac{My}{Myd}+\frac{Mz}{Mzd}\leq 1$ Fy, Fz, Mx, My, Mz are working loads			

* Vibration might occur when the effective stroke is longer than 650mm.
The maximum speed should be decreased by 15% for every 100mm of increased stroke.
** The load condition is based on 10,000km operation.
*** If used on the vertical axis or in a special condition, please contact HIWIN.

Model Number for KA170B-FL

KA170	B	-120	C	-3000	A	FL	U	S1	M
Model	Timing Belt	Pulley Perimeter	Precision Grade	Effective Stroke	Slider Type	Motor Flange	Cover	Limit Switch	Motor
			C: Normal		A: Standard	FL: Left	U: Without Cover None : Standard Cover	S1: OMRON SX671 S2: OMRON SX674 S3: SUNX GX-F12A S4: SUNX GX-F12A-P None: No Limit Switch	M: Supplied With Motor None: Without Motor

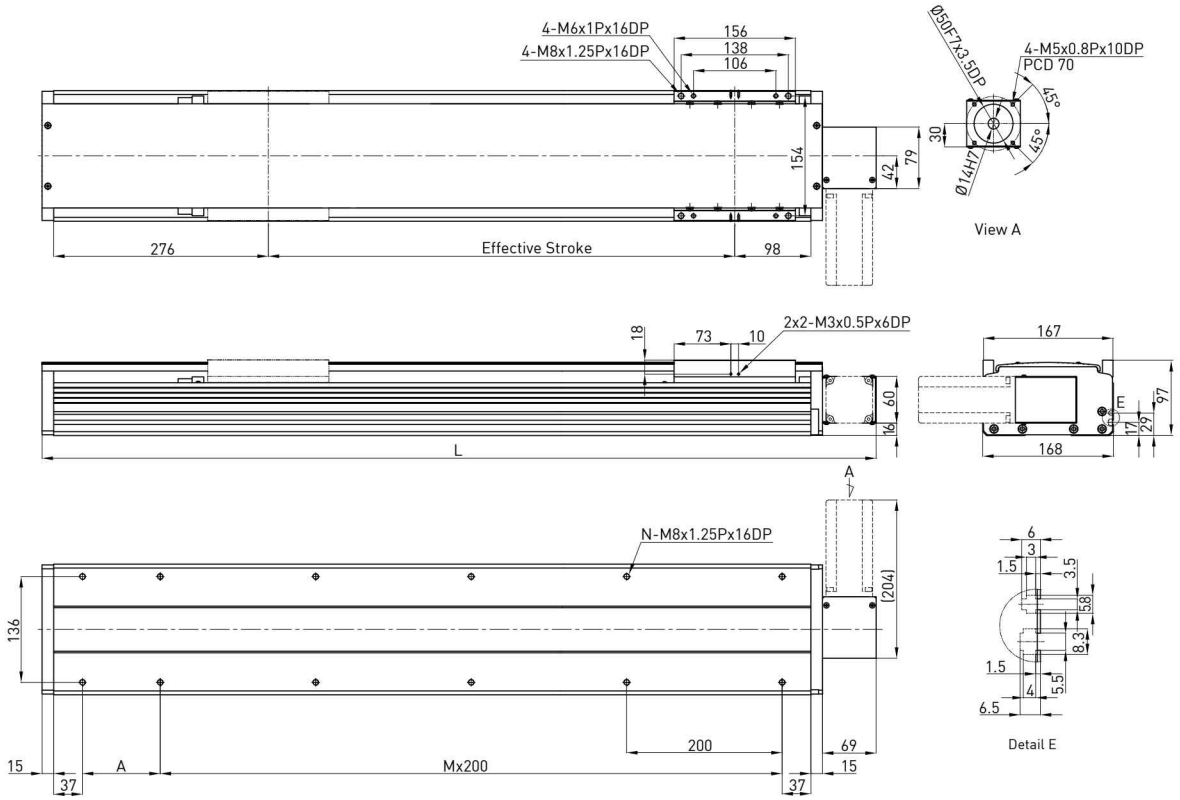

Effective stroke (mm)	L	A	M	N	Weight (kg)
200	673	100	2	8	14.74
400	873	100	3	10	17.88
600	1073	100	4	12	21.13
800	1273	100	5	14	24.37
1000	1473	100	6	16	27.52
1200	1673	100	7	18	30.77
1400	1873	100	8	20	34.01
1600	2073	100	9	22	37.07
1800	2273	100	10	24	40.3
2000	2473	100	11	26	43.54
2200	2673	100	12	28	46.68
2400	2873	100	13	30	49.92
2600	3073	100	14	32	53.07
2800	3273	100	15	34	56.2
3000	3473	100	16	36	59.44

AC motor output		W	400
Drive			Timing Belt
Pulley Perimeter		mm	120
Pulley RPM		RPM	900
Max linear speed		mm/sec	1800
Rated thrust		N	133
Repeatability		mm	±0.1
Effective stroke		mm	200~3000
Max load (H)		kg	30
Rated dynamic load*	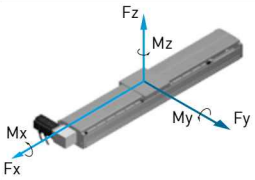	Fyd	N	50
		Fzd	N	300
		Mxd	N-m	115
		Myd	N-m	96
		Mzd	N-m	96
Permitted load condition**	$\frac{Fy}{Fyd}+\frac{Fz}{Fzd}+\frac{Mx}{Mxd}+\frac{My}{Myd}+\frac{Mz}{Mzd}\leq 1$ Fy, Fz, Mx, My, Mz are working loads		

*The load condition is based on 10,000km operation.
**For horizontal applications only. If used in a special condition, please contact HIWIN.

Model Number for KA170B-FR

KA170	B	-120	C	-3000	A	FR	U	S1	M
Model	Timing Belt	Pulley Perimeter	Precision Grade	Effective Stroke	Slider Type	Motor Flange	Cover	Limit Switch	Motor
			C: Normal		A: Standard	FR: Right	U: Without Cover None : Standard Cover	S1: OMRON SX671 S2: OMRON SX674 S3: SUNX GX-F12A S4: SUNX GX-F12A-P None: No Limit Switch	M: Supplied With Motor None: Without Motor

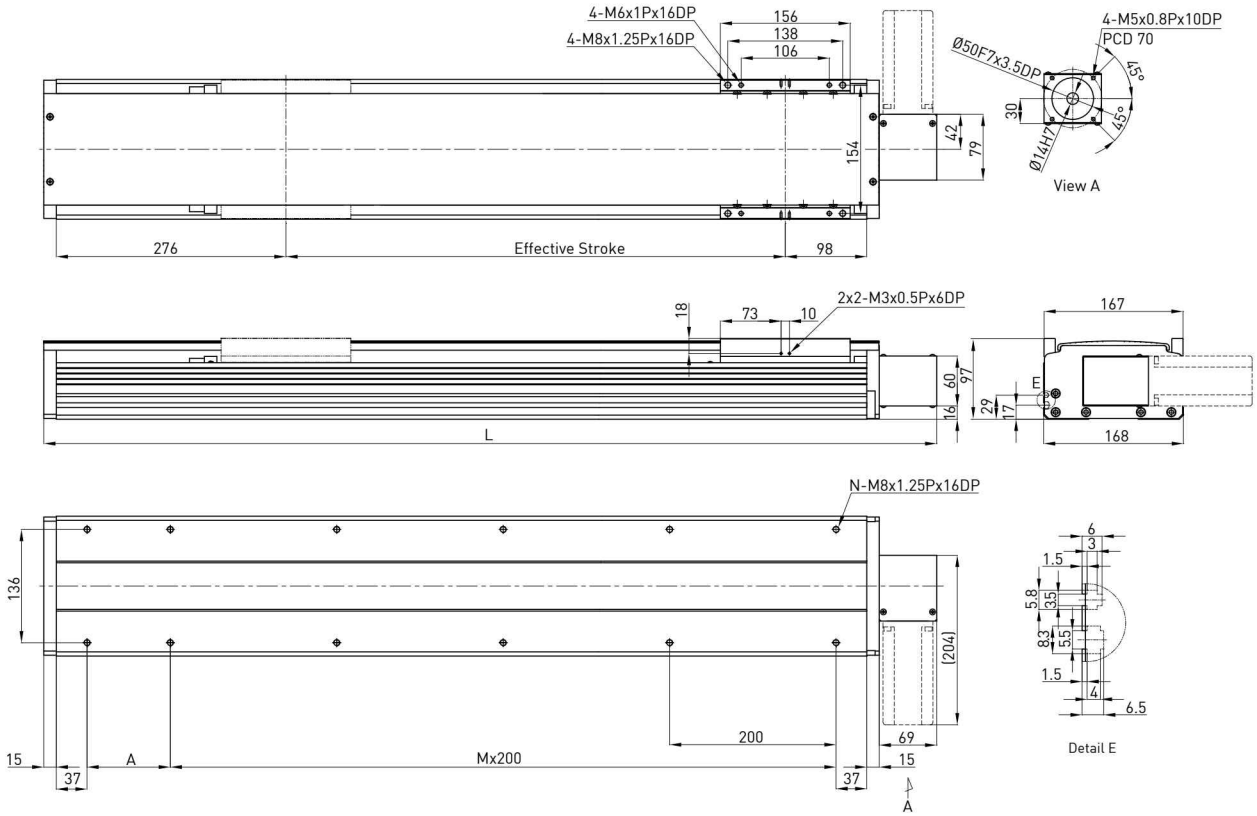

Effective stroke (mm)	L	A	M	N	Weight (kg)
200	673	100	2	8	14.74
400	873	100	3	10	17.88
600	1073	100	4	12	21.13
800	1273	100	5	14	24.37
1000	1473	100	6	16	27.52
1200	1673	100	7	18	30.77
1400	1873	100	8	20	34.01
1600	2073	100	9	22	37.07
1800	2273	100	10	24	40.3
2000	2473	100	11	26	43.54
2200	2673	100	12	28	46.68
2400	2873	100	13	30	49.92
2600	3073	100	14	32	53.07
2800	3273	100	15	34	56.2
3000	3473	100	16	36	59.44

AC motor output			W	400
Drive				Timing Belt
Pulley Perimeter			mm	120
Pulley RPM			RPM	900
Max linear speed			mm/sec	1800
Rated thrust			N	133
Repeatability			mm	±0.1
Effective stroke			mm	200~3000
Max load (H)			kg	30
Rated dynamic load*	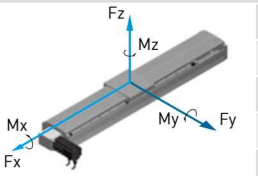	Fyd	N	50
		Fzd	N	300
		Mxd	N-m	115
		Myd	N-m	96
		Mzd	N-m	96
Permitted load condition**	$\frac{Fy}{Fyd}+\frac{Fz}{Fzd}+\frac{Mx}{Mxd}+\frac{My}{Myd}+\frac{Mz}{Mzd}\leq 1$ Fy, Fz, Mx, My, Mz are working loads			

*The load condition is based on 10,000km operation.
**For horizontal applications only. If used in a special condition, please contact HIWIN.

Model Number for KA200

KA200	-25	P	-1250	A	F0	U	S1	M
Model	Lead	Precision Grade	Effective Stroke	Slider Type	Motor Flange	Cover	Limit Switch	Motor
	10mm 25mm	C: Normal P: Precision		A: Standard	F0 : Direct	U: Without Cover None : Standard Cover	S1: OMRON SX671 S2: OMRON SX674 S3: SUNX GX-F12A S4: SUNX GX-F12A-P None: No Limit Switch	M: Supplied With Motor None: Without Motor

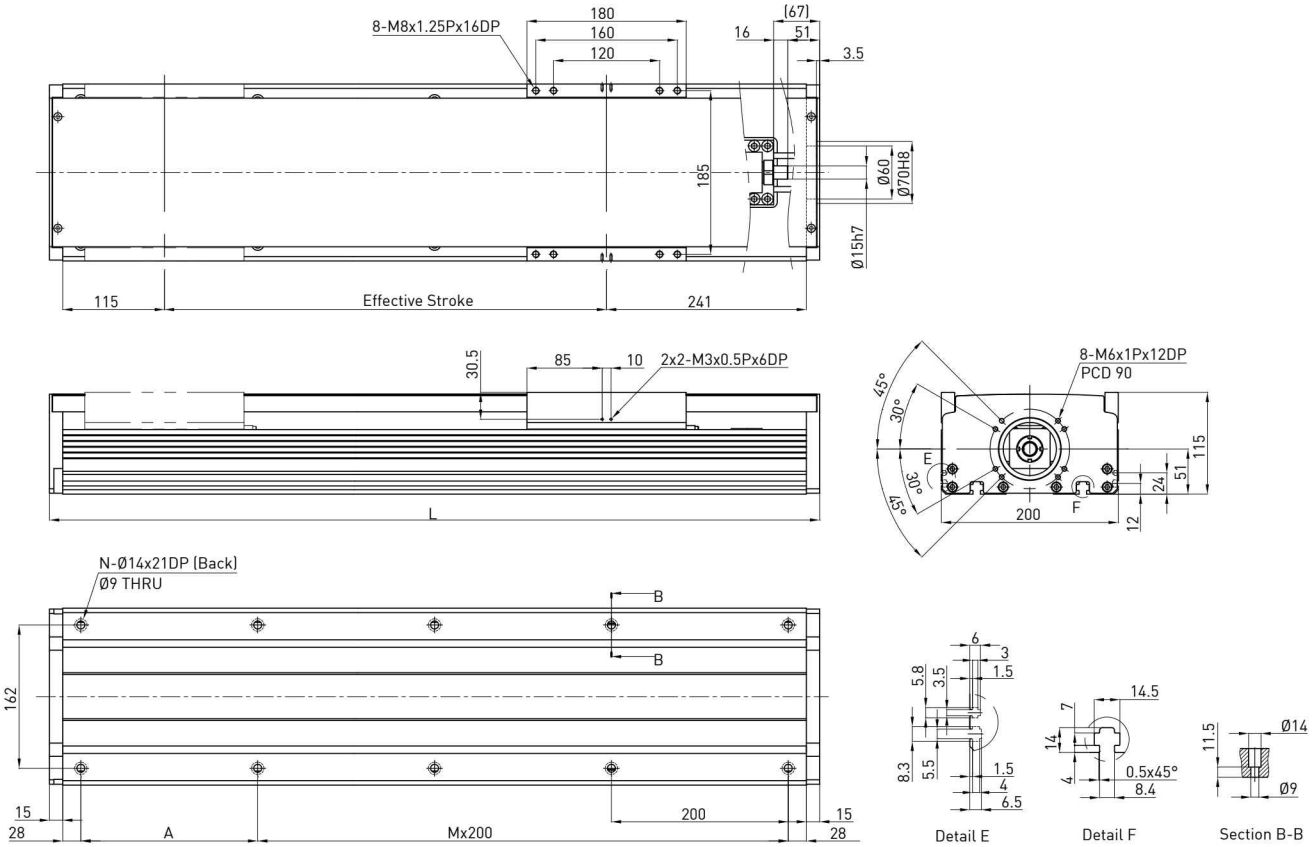

Effective stroke (mm)	L	A	M	N	Weight (kg)
150	536	50	2	8	17.66
200	586	100	2	8	18.99
250	636	150	2	8	20.32
300	686	200	2	8	21.65
350	736	50	3	10	22.98
400	786	100	3	10	24.31
450	836	150	3	10	25.64
500	886	200	3	10	26.97
550	936	50	4	12	28.3
600	986	100	4	12	29.63
650	1036	150	4	12	30.96
700	1086	200	4	12	32.29
750	1136	50	5	14	33.62
800	1186	100	5	14	34.95
850	1236	150	5	14	36.28
900	1286	200	5	14	37.61
950	1336	50	6	16	38.94
1000	1386	100	6	16	40.27
1050	1436	150	6	16	41.61
1100	1486	200	6	16	42.93
1150	1536	50	7	18	44.26
1200	1586	100	7	18	45.59
1250	1636	150	7	18	46.92

AC motor output		W	750	
Drive			Ballscrew C7(normal)	
Lead		mm	10	25
Rated RPM		RPM	3000	3000
Max linear speed*		mm/sec	500	1250
Rated thrust		N	1050	420
Repeatability		mm	±0.02	
Effective stroke		mm	150~1250	
Max load (H)		kg	150	85
Rated dynamic load**	Fyd	N	50	50
	Fzd	N	1500	850
	Mxd	N-m	180	185
	Myd	N-m	145	155
	Mzd	N-m	145	155
Permitted load condition***	$\frac{Fy}{Fyd}+\frac{Fz}{Fzd}+\frac{Mx}{Mxd}+\frac{My}{Myd}+\frac{Mz}{Mzd}\leq 1$ Fy, Fz, Mx, My, Mz are working loads			

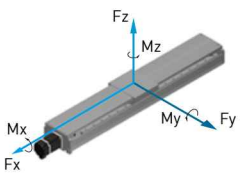

* Vibration might occur when the effective stroke is longer than 800mm.
The maximum speed should be decreased by 15% for every 100mm of increased stroke.
**The load condition is based on 10,000km operation.
***If used in a special condition, please contact HIWIN.

Model Number for KA200-FD

KA200	-25	P	-1250	A	FD	U	S1	M
Model	Lead	Precision Grade	Effective Stroke	Slider Type	Motor Flange	Cover	Limit Switch	Motor
	10mm 25mm	C: Normal P: Precision		A: Standard	FD: Bottom	U: Without Cover None : Standard Cover	S1: OMRON SX671 S2: OMRON SX674 S3: SUNX GX-F12A S4: SUNX GX-F12A-P None: No Limit Switch	M: Supplied With Motor None: Without Motor

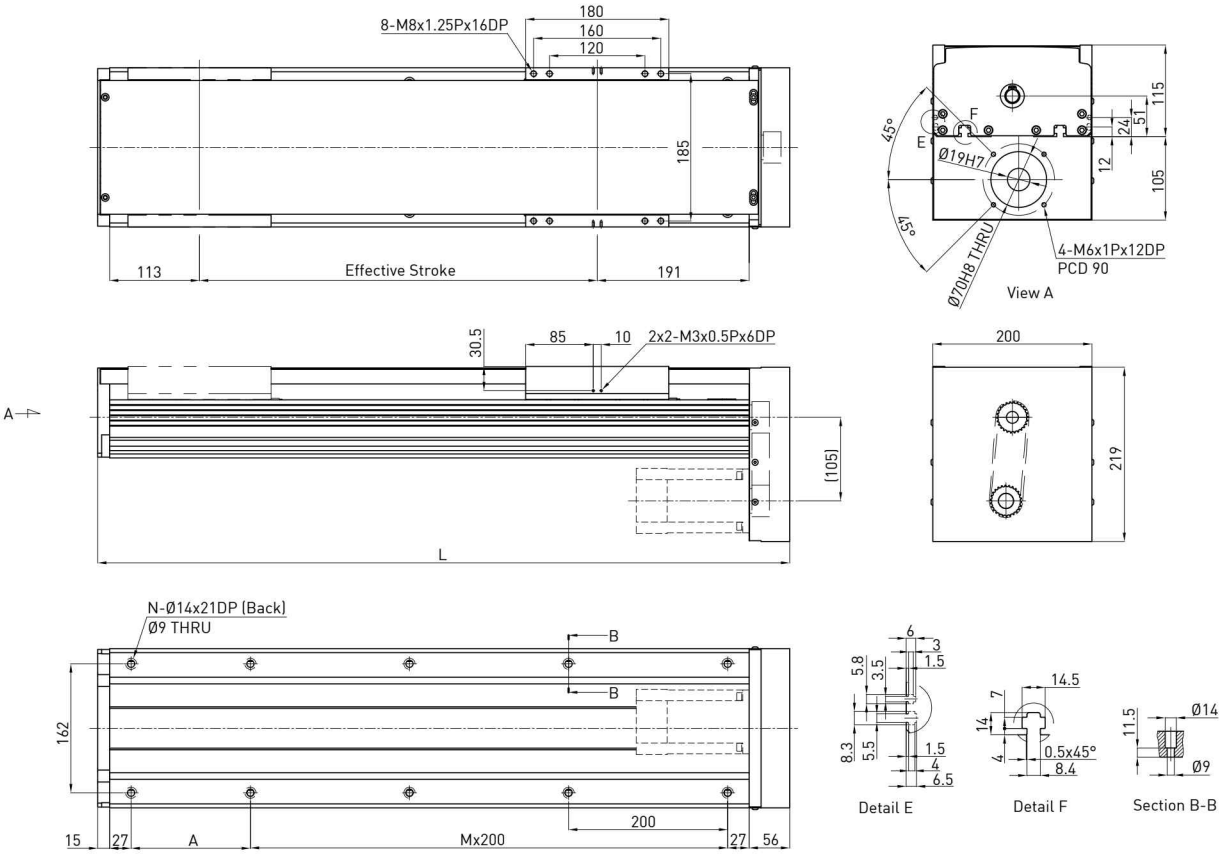

Effective stroke (mm)	L	A	M	N	Weight (kg)
150	525	200	1	6	18.46
200	575	50	2	8	19.79
250	625	100	2	8	21.12
300	675	150	2	8	22.45
350	725	200	2	8	23.78
400	775	50	3	10	25.11
450	825	100	3	10	26.44
500	875	150	3	10	27.77
550	925	200	3	10	29.1
600	975	50	4	12	30.43
650	1025	100	4	12	31.76
700	1075	150	4	12	33.09
750	1125	200	4	12	34.42
800	1175	50	5	14	35.75
850	1225	100	5	14	37.08
900	1275	150	5	14	38.41
950	1325	200	5	14	39.74
1000	1375	50	6	16	41.07
1050	1425	100	6	16	42.41
1100	1475	150	6	16	43.73
1150	1525	200	6	16	45.06
1200	1575	50	7	18	46.39
1250	1625	100	7	18	47.72

AC motor output		W	750	
Drive			Ballscrew C7(normal)	
Lead		mm	10	25
Rated RPM		RPM	3000	3000
Max linear speed*		mm/sec	500	1250
Rated thrust		N	1050	420
Repeatability		mm	±0.02	
Effective stroke		mm	150~1250	
Max load (H)		kg	150	85
Rated dynamic load**	Fyd	N	50	50
	Fzd	N	1500	850
	Mxd	N-m	180	185
	Myd	N-m	145	155
	Mzd	N-m	145	155
Permitted load condition***	$\frac{Fy}{Fyd}+\frac{Fz}{Fzd}+\frac{Mx}{Mxd}+\frac{My}{Myd}+\frac{Mz}{Mzd}\leq 1$ Fy, Fz, Mx, My, Mz are working loads			

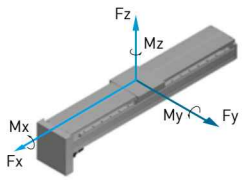

* Vibration might occur when the effective stroke is longer than 800mm.
The maximum speed should be decreased by 15% for every 100mm of increased stroke.
**The load condition is based on 10,000km operation.
***If used in a special condition, please contact HIWIN.

Model Number for KA200-FI

KA200	-25	P	-1250	A	FI	U	S1	M
Model	Lead	Precision Grade	Effective Stroke	Slider Type	Motor Flange	Cover	Limit Switch	Motor
	10mm 25mm	C: Normal P: Precision		A: Standard	FI: Internal	U: Without Cover None : Standard Cover	S1: OMRON SX671 S2: OMRON SX674 S3: SUNX GX-F12A S4: SUNX GX-F12A-P None: No Limit Switch	M: Supplied With Motor None: Without Motor

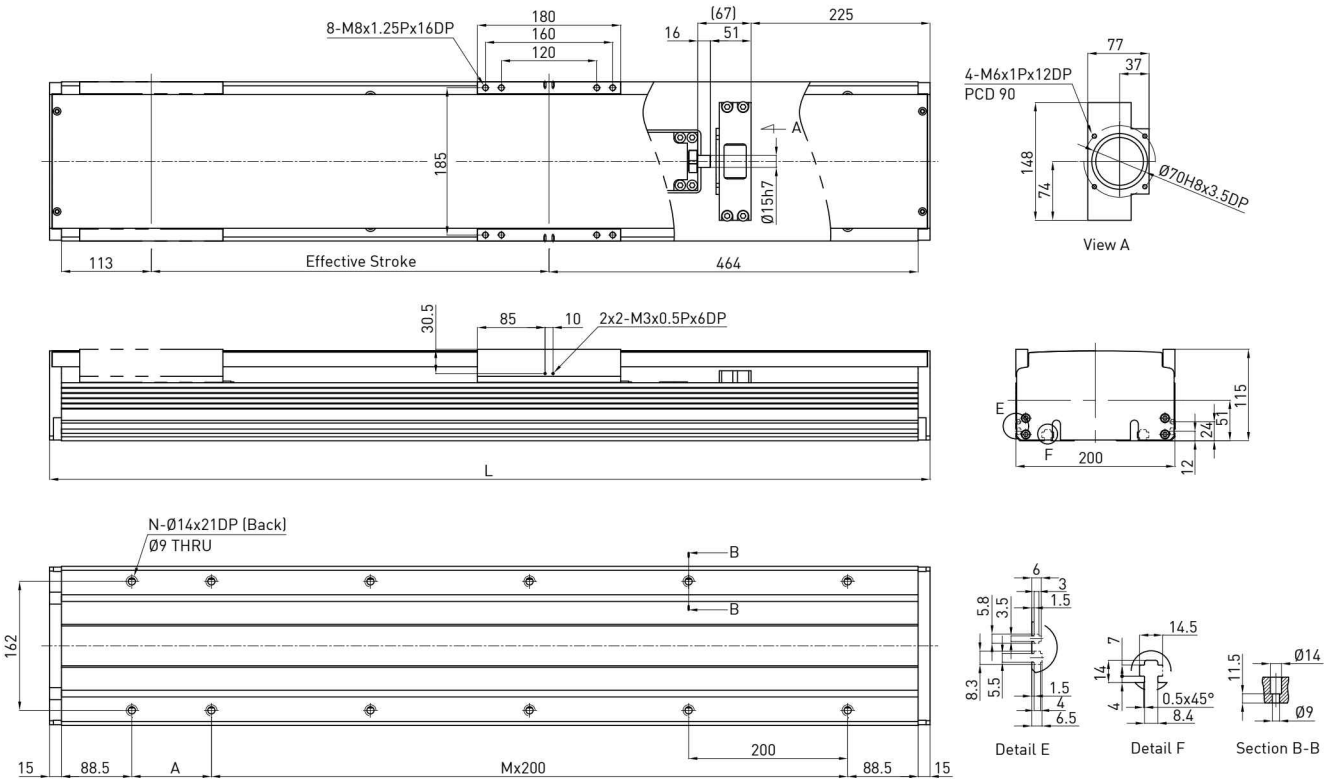

Effective stroke (mm)	L	A	M	N	Weight (kg)
150	757	150	2	8	19.83
200	807	200	2	8	21.32
250	857	50	3	10	22.82
300	907	100	3	10	24.31
350	957	150	3	10	25.81
400	1007	200	3	10	27.3
450	1057	50	4	12	28.79
500	1107	100	4	12	30.29
550	1157	150	4	12	31.78
600	1207	200	4	12	33.27
650	1257	50	5	14	34.77
700	1307	100	5	14	36.26
750	1357	150	5	14	37.76
800	1407	200	5	14	39.25
850	1457	50	6	16	40.74
900	1507	100	6	16	42.24
950	1557	150	6	16	43.73
1000	1607	200	6	16	45.22
1050	1657	50	7	18	46.73
1100	1707	100	7	18	48.21
1150	1757	150	7	18	49.7
1200	1807	200	7	18	51.2
1250	1857	50	8	19	52.69

AC motor output		W	750	
Drive			Ballscrew C7(normal)	
Lead		mm	10	25
Rated RPM		RPM	3000	3000
Max linear speed*		mm/sec	500	1250
Rated thrust		N	1050	420
Repeatability		mm	±0.02	
Effective stroke		mm	150~1250	
Max load (H)		kg	150	85
Rated dynamic load**	Fyd	N	50	50
	Fzd	N	1500	850
	Mxd	N-m	180	185
	Myd	N-m	145	155
	Mzd	N-m	145	155
Permitted load condition***	$\frac{Fy}{Fyd}+\frac{Fz}{Fzd}+\frac{Mx}{Mxd}+\frac{My}{Myd}+\frac{Mz}{Mzd}\leq 1$ Fy, Fz, Mx, My, Mz are working loads			

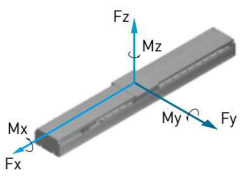

* Vibration might occur when the effective stroke is longer than 800mm.
The maximum speed should be decreased by 15% for every 100mm of increased stroke.
**The load condition is based on 10,000km operation.
***If used in a special condition, please contact HIWIN.

Model Number for KA200-FL

KA200	-25	P	-1250	A	FL	U	S1	M
Model	Lead	Precision Grade	Effective Stroke	Slider Type	Motor Flange	Cover	Limit Switch	Motor
	10mm 25mm	C: Normal P: Precision		A: Standard	FL: Left	U: Without Cover None : Standard Cover	S1: OMRON SX671 S2: OMRON SX674 S3: SUNX GX-F12A S4: SUNX GX-F12A-P None: No Limit Switch	M: Supplied With Motor None: Without Motor

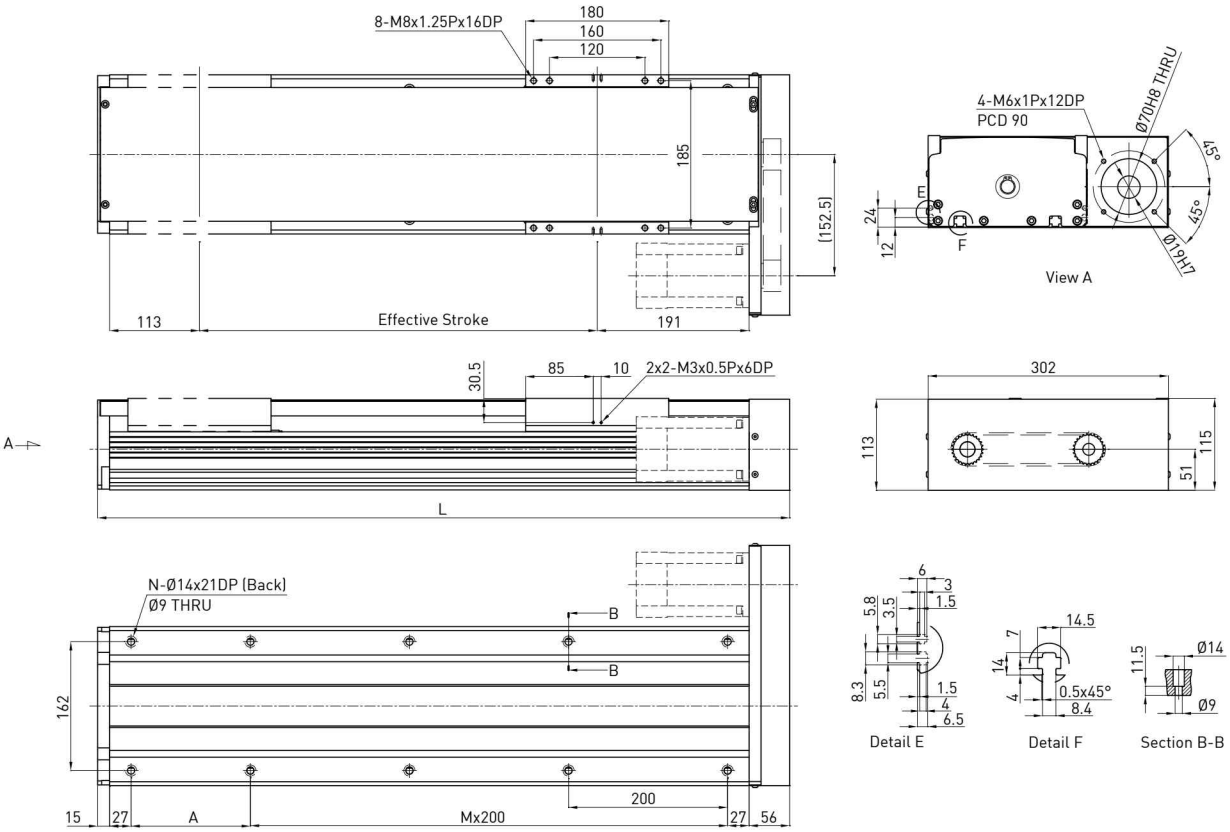

Effective stroke (mm)	L	A	M	N	Weight (kg)
150	525	200	1	6	18.46
200	575	50	2	8	19.79
250	625	100	2	8	21.12
300	675	150	2	8	22.45
350	725	200	2	8	23.78
400	775	50	3	10	25.11
450	825	100	3	10	26.44
500	875	150	3	10	27.77
550	925	200	3	10	29.1
600	975	50	4	12	30.43
650	1025	100	4	12	31.76
700	1075	150	4	12	33.09
750	1125	200	4	12	34.42
800	1175	50	5	14	35.75
850	1225	100	5	14	37.08
900	1275	150	5	14	38.41
950	1325	200	5	14	39.74
1000	1375	50	6	16	41.07
1050	1425	100	6	16	42.41
1100	1475	150	6	16	43.73
1150	1525	200	6	16	45.06
1200	1575	50	7	18	46.39
1250	1625	100	7	18	47.72

AC motor output		W	750	
Drive			Ballscrew C7(normal)	
Lead		mm	10	25
Rated RPM		RPM	3000	3000
Max linear speed*		mm/sec	500	1250
Rated thrust		N	1050	420
Repeatability		mm	±0.02	
Effective stroke		mm	150~1250	
Max load (H)		kg	150	85
Rated dynamic load**	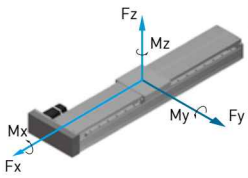 Fyd	N	50	50
	Fzd	N	1500	850
	Mxd	N-m	180	185
	Myd	N-m	145	155
	Mzd	N-m	145	155
Permitted load condition***	$\frac{Fy}{Fyd}+\frac{Fz}{Fzd}+\frac{Mx}{Mxd}+\frac{My}{Myd}+\frac{Mz}{Mzd}\leq 1$ Fy, Fz, Mx, My, Mz are working loads			

* Vibration might occur when the effective stroke is longer than 800mm.
The maximum speed should be decreased by 15% for every 100mm of increased stroke.
**The load condition is based on 10,000km operation.
***If used in a special condition, please contact HIWIN.

Model Number for KA200-FR

KA200	-25	P	-1250	A	FR	U	S1	M
Model	Lead	Precision Grade	Effective Stroke	Slider Type	Motor Flange	Cover	Limit Switch	Motor
	10mm 25mm	C: Normal P: Precision		A: Standard	FR: Right	U: Without Cover None : Standard Cover	S1: OMRON SX671 S2: OMRON SX674 S3: SUNX GX-F12A S4: SUNX GX-F12A-P None: No Limit Switch	M: Supplied With Motor None: Without Motor

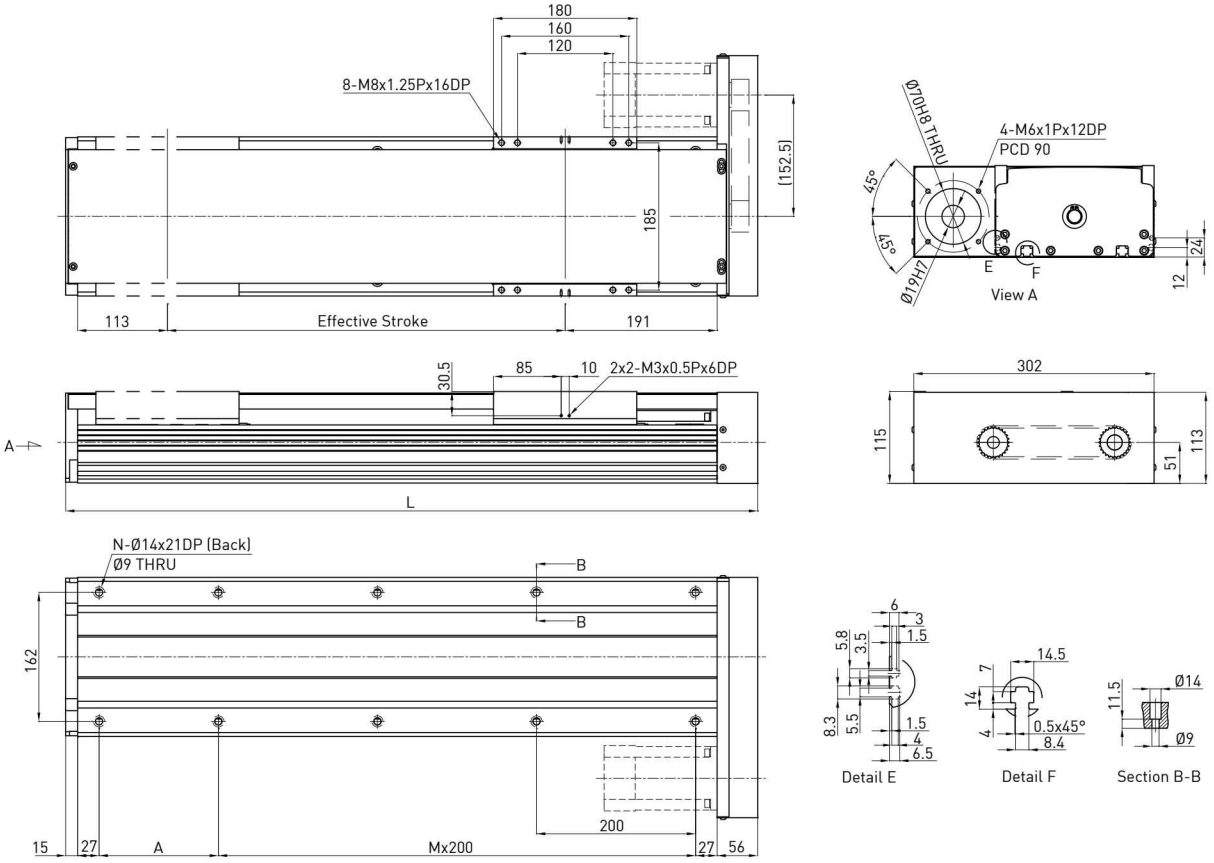

Effective stroke (mm)	L	A	M	N	Weight (kg)
150	525	200	1	6	18.46
200	575	50	2	8	19.79
250	625	100	2	8	21.12
300	675	150	2	8	22.45
350	725	200	2	8	23.78
400	775	50	3	10	25.11
450	825	100	3	10	26.44
500	875	150	3	10	27.77
550	925	200	3	10	29.1
600	975	50	4	12	30.43
650	1025	100	4	12	31.76
700	1075	150	4	12	33.09
750	1125	200	4	12	34.42
800	1175	50	5	14	35.75
850	1225	100	5	14	37.08
900	1275	150	5	14	38.41
950	1325	200	5	14	39.74
1000	1375	50	6	16	41.07
1050	1425	100	6	16	42.41
1100	1475	150	6	16	43.73
1150	1525	200	6	16	45.06
1200	1575	50	7	18	46.39
1250	1625	100	7	18	47.72

AC motor output		W	750	
Drive			Ballscrew C7(normal)	
Lead		mm	10	25
Rated RPM		RPM	3000	3000
Max linear speed*		mm/sec	500	1250
Rated thrust		N	1050	420
Repeatability		mm	±0.02	
Effective stroke		mm	150~1250	
Max load (H)		kg	150	85
Rated dynamic load**	Fyd	N	50	50
	Fzd	N	1500	850
	Mxd	N-m	180	185
	Myd	N-m	145	155
	Mzd	N-m	145	155
Permitted load condition**	$\frac{Fy}{Fyd}+\frac{Fz}{Fzd}+\frac{Mx}{Mxd}+\frac{My}{Myd}+\frac{Mz}{Mzd}\leq 1$ Fy, Fz, Mx, My, Mz are working loads			

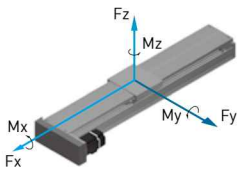

* Vibration might occur when the effective stroke is longer than 800mm.
The maximum speed should be decreased by 15% for every 100mm of increased stroke.
**The load condition is based on 10,000km operation.
***If used in a special condition, please contact HIWIN.