YK180XC

Clean type: Extra small type

Note. Built-to-order product. Contact us for the delivery period.

- Arm length 180mm
- Maximum payload 1kg

Ordering method

YK180XC - 100 - [ ] - RCX340-4 - [ ] - [ ] - [ ] - [ ] - [ ] - [ ] - [ ]

Model	Z axis stroke	Cable length	Controller / Number of controllable axes	Safety standard	Option A (OP.A)	Option B (OP.B)	Option C (OP.C)	Option D (OP.D)	Option E (OP.E)	Absolute battery
YK180XC	100: 100mm	3L: 3.5m 5L: 5m 10L: 10m	RCX340-4							

Specify various controller setting items. RCX340 ▶ P.678

Basic specifications

		X axis	Y axis	Z axis	R axis
Axis specifications	Arm length (mm)	71	109	100	–
	Rotation angle (˚)	+/-120	+/-140	–	+/-360
AC servo motor output (W)		50	30	30	30
Repeatability Note 1 (XYZ: mm) (R: ˚)		+/-0.01		+/-0.01	+/-0.004
Maximum speed (XYZ: m/sec) (R: ˚/sec)		3.3		0.7	1700
Maximum payload (kg)		1.0			
Standard cycle time: with 0.1kg payload Note 2 (sec)		0.42			
R-axis tolerable moment of inertia Note 3 (kgm²)		0.01			
User wiring (sq × wires)		0.1 × 8			
User tubing (Outer diameter)		ϕ3 × 2			
Travel limit		1.Soft limit, 2.Mechanical limit (X, Y, Zaxis)			
Robot cable length (m)		Standard: 3.5 Option: 5, 10			
Weight (kg) (Excluding robot cable) Note 4		6.5			
Robot cable weight		1.5kg (3.5m) 2.1kg (5m) 4.2kg (10m)			
Degree of cleanliness		CLASS 10 (0.1 μm base)			
Intake air (Nℓ/min)		30			

Note 1. This is the value at a constant ambient temperature. (X,Y axes)
Note 2. When moving 25mm in vertical direction and 100mm in horizontal direction reciprocally.
Note 3. The acceleration coefficient is set automatically in accordance with the tip weight and R-axis moment of inertia settings.
Note 4. The total robot weight is the sum of the robot body weight and the cable weight.

Controller

Controller	Power capacity (VA)	Operation method
RCX340	500	Programming / I/O point trace / Remote command / Operation using RS-232C communication

YK180XC

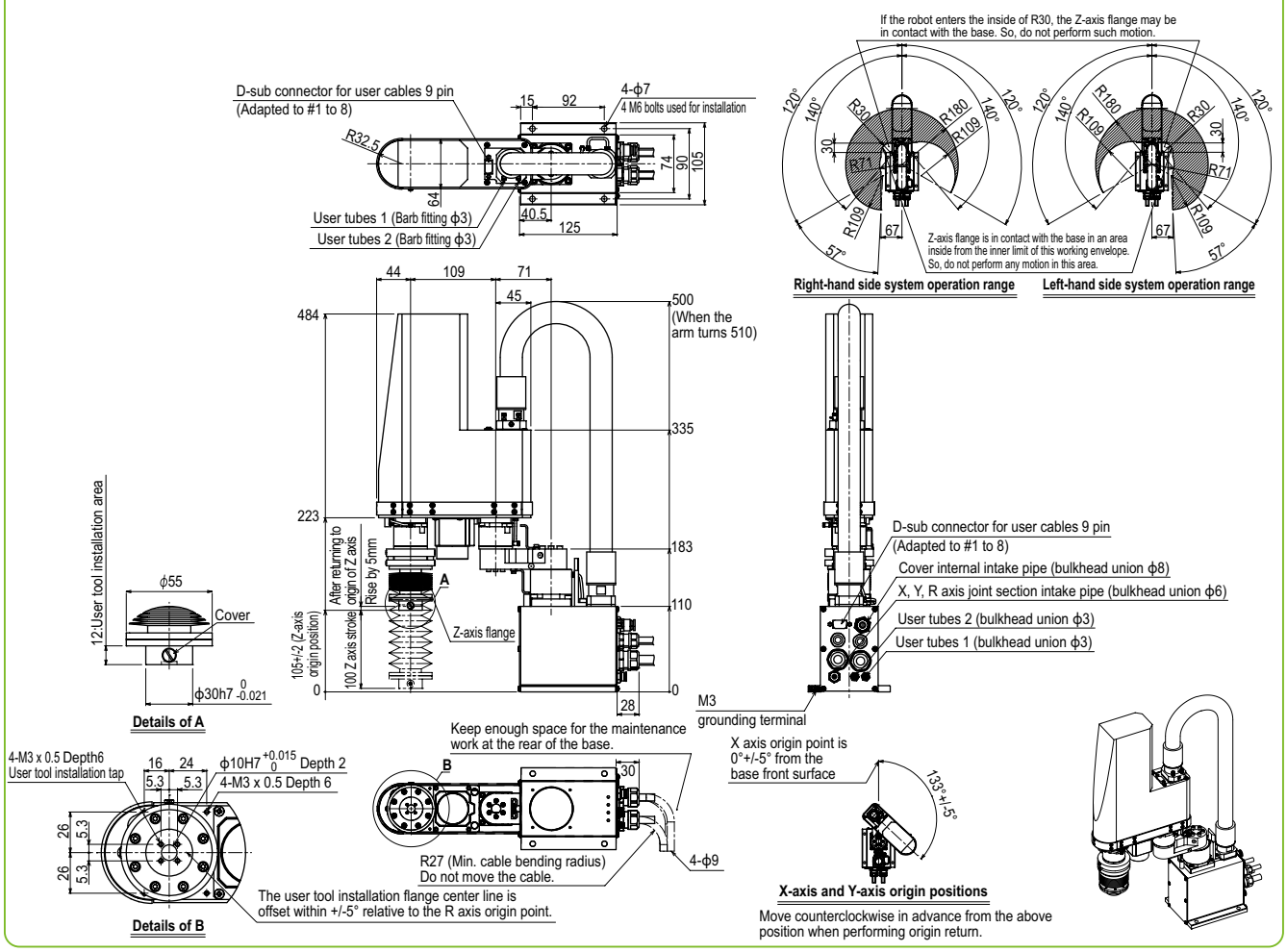

Controller RCX340 ▶ 678